OMRON

Vision Accessory Catalog

realizing

Best Solutions for Quality Inspection and Control

With a complete line-up of Lights and Lenses, advanced Vision Sensors, and 30 years of vision solutions knowhow, OMRON provides solutions to maintain your quality, increase the precision of your machines, and reduce your implementation costs.

LED Lights Constant voltage type FLV Series

Bar Light	FLV-BR	Uniform illumination over wide areas	p4
Direct Ring Light	FLV-DR	Used on non-specular surfaces and area lighting	p7
Low Angle Ring Light	FLV-DL	Perfect for defect and profile detection	p10
Coaxial Light	FLV-CL	Ideal for defect and character inspection on mirror surfaces	p12
Shadowless Ring Light	FLV-FR	Eliminate local reflections on glossy surfaces	p14
Shadowless Low Angle Ring Light	FLV-FP	Suitable for edge detection of glossy objects	p16
Shadowless Dome Ring Light	FLV-FS	Uniform diffused illumination ideal for irregular surfaces	p17
Shadowless Square Light	FLV-FQ	Provides even illumination across squared areas	p18
Spot Light	FLV-EP50	Uniform, parallel light for long-distance part detection	p19
High-power Spot Light	FLV-EP08	Used with coaxial lens to detect alignment mark	p20
Direct Back Light	FLV-DB	High-brightness flat-surface lights for profile measurements	p22
Edge Type Light	FLV-FB	Ultrathin flat-surface light fits into narrow spaces	p24
Edge Type Coaxial Light	FLV-FX	Uniform diffused illumination with many effects such as backlighting and coaxial lighting	p26
Dome Light	FLV-DD	Uniform illumination from all directions for irregular surfaces	p28
Line Light	FLV-LN	High uniformity and brightness ideal for high-speed processing	p30
Camera-mount Lighting Controller for FLV Series	FLV-TCC	Camera-mount controller to save space and simplify wiring	p32
Analog Lighting Controller for FLV Series	FLV-ATC	Stationary type suitable for high power consumption lights	p38
Digital Lighting Controller for FLV Series	3Z4S-LT IDGB	PWM light control power unit for LED lights	p45
FLV Series Options			p48
LED Characteristics			p69

OMRON's unique Camera-mount Lighting Controller helps reduce your implementation costs by reducing wiring work, saving space in the control panel, and easily setting luminance control without programming.

Refer to page 32

LED Lights Constant current type FL Series

MDMC Light	FL-MD	Flexibly changes colors and angles		p51
Photometric Stereo Light	FL-PS	Shows defects accurately		p53
High-brightness LED Light ODR				
・Bar Light	FL-BR	High-brightness bar light suitable for high-speed lines		p55
・Direct Ring Light	FL-DR	High brightness ring light suitable for high-speed lines		p58
Camera-mount Lighting Controller for High-brightness LED Lights	FL-TCC	Camera-mount controller to save space and simplify wiring		p61
Digital Lighting Controller for High-brightness LED Lights	FL-STC	Small body with digital light control to fit in any location		p63
Lighting Controller for Photometric Stereo Lights	FL-TCC1PS	Camera-mount controller eliminates the need to control light emission timing		p66
FL Series Option				p67

Lenses

Lens Selection p70
Standard Lens p71
Telecentric Lens p76
Vibrations and Shocks Resistant Lens p80

■Options

・Polarizing Filter	SV-PL	Filters to prevent diffused reflection		p90
・Protection Cover Filter	SV-GA	Covers to protect lens surfaces from dust		p90
・Extension Tubes For C-mount Cameras	SV-EXR	Mounted to lenses to change field of view or working distance		p91
For M42-mount Cameras	VS-EXR/M42			
For Small Digital CCDCameras	FZ-LESR			
・Rear Converter Lens	SV-1.5X/2.0X	Mounted to lenses to change field of view or working distance		p91
・M42 - F Mount Conversion Adapter	FH-ADF/M42-10	Adapter to connect F mount lenses to M42 cameras		p91
Optical Chart				p92
Safety Precautions				p101

Bar Light

FLV-BR Series

Many color and size variations are available to uniformly illuminate wide surfaces.

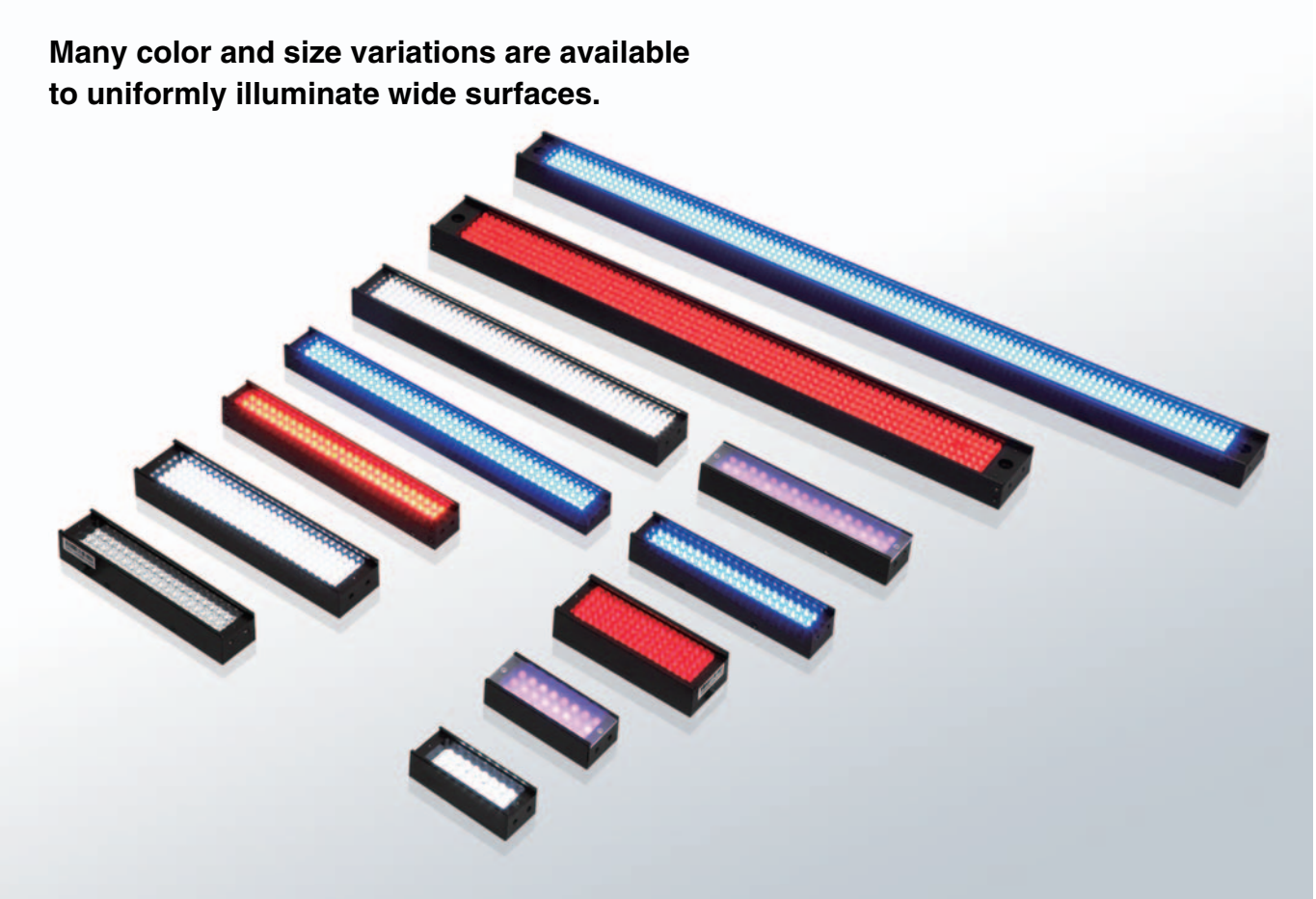

Product Features

- Ideal for illumination of wide, rectangular surfaces.
- Many color and size variations.

Cross-sectional Diagram

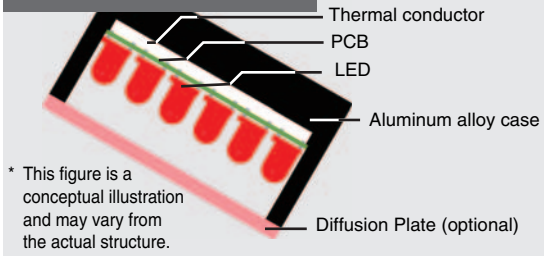

* This figure is a conceptual illustration and may vary from the actual structure.

Illustration of Illumination

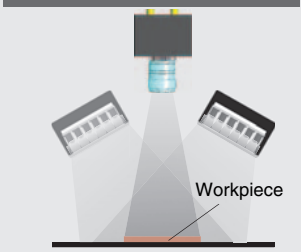

Applications

- Detection of metal surfaces
- Detection of cracks on surfaces
- Detection of LCD panels

Positioning of LED Packages

Detection of Faulty LGA Electrodes

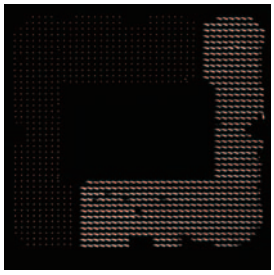

Detection of Printed Logo Marks and Characters on Long Workpieces

Ordering Information

Model	Color	Power consumption (W)	Dimensions				Controller *			Weight (g)	Options	
			Lighting Area Dimension (mm)	Outside Dimension (mm)	Height (mm)	Drawing	FLV-TCC□	FLV-ATC□	3Z4S-LT IDGB□		Diffusion Plate	Polarization Plate
FLV-BR6022W	WHITE	1.4	48×18	60×22	17	A	○	○	○	60	○	○
FLV-BR6022R	RED	1.3					○	○	○			
FLV-BR6022B	BLUE	1.4					○	○	○			
FLV-BR6022IR	IR	0.9					○	○	○			
FLV-BR6424UV	UV	1.8	53×20	64×24	17	J	○	○	○	70	○	×
FLV-BR8532W	WHITE	3.5	73×25	85×32	20	B	○	○	○	130	○	○
FLV-BR8532R	RED	3.1					○	○	○			
FLV-BR8532B	BLUE	3.5					○	○	○			
FLV-BR11222W	WHITE	4.2	100×18	112×22	19	C	○	○	○	100	○	○
FLV-BR11222R	RED	2.6					○	○	○			
FLV-BR11222B	BLUE	4.2					○	○	○			
FLV-BR11222IR	IR	1.8					○	○	○			
FLV-BR11624UV	UV	3.6	105×20	116×24	19	K	○	○	○	120	○	–
FLV-BR14030W	WHITE	6.1	126×25	140×30	19	D	○	○	○	140	○	○
FLV-BR14030R	RED	4.8					○	○	○			
FLV-BR14030B	BLUE	6.1					○	○	○			
FLV-BR15020W	WHITE	5.5	138×16	150×20	19	E	○	○	○	120	○	○
FLV-BR15020R	RED	3.1					○	○	○			
FLV-BR15020B	BLUE	5.5					○	○	○			
FLV-BR21222W	WHITE	8.7	199×18	212×22	16	F	○	○	○	140	○	○
FLV-BR21222R	RED	5.0					○	○	○			
FLV-BR21222B	BLUE	8.7					○	○	○			
FLV-BR21230W	WHITE	8.8	200×25	212×30	19	G	○	○	○	220	○	○
FLV-BR21230R	RED	7.0					○	○	○			
FLV-BR21230B	BLUE	8.8					○	○	○			
FLV-BR21230IR	IR	6.1					○	○	○			
FLV-BR21230UV	UV	7.8	200×25	212×30	19	L	○	○	○	230	○	×
FLV-BR38037W	WHITE	15.9	350×33.2	380×37.2	19	H	×	○	○	430	○	○
FLV-BR38037R	RED	11.3					○	○	○			
FLV-BR38037B	BLUE	15.9					×	○	○			
FLV-BR48031W	WHITE	21.9	450×25	480×31	18	I	×	○	○	460	○	○
FLV-BR48031R	RED	18.0					×	○	○			
FLV-BR48031B	BLUE	21.9					×	○	○			

* For the connectable Lighting Controller models and conditions, refer to the Specifications pages of each Lighting Controller.
FLV-TCC□: page 32
FLV-ATC□: page 38
3Z4S-LT IDGB□: page 45

Note: Refer to page 69 for LED Characteristics.
○: Applicable ×: Not applicable

Bar Light FLV-BR Series

Dimensions

(Unit: mm)

A FLV-BR6022□

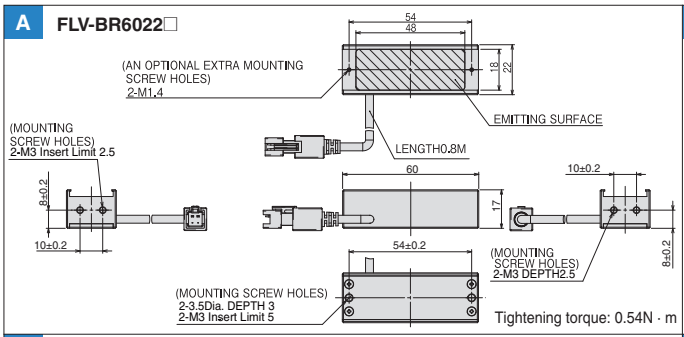

Tightening torque: 0.54N · m

B FLV-BR8532□

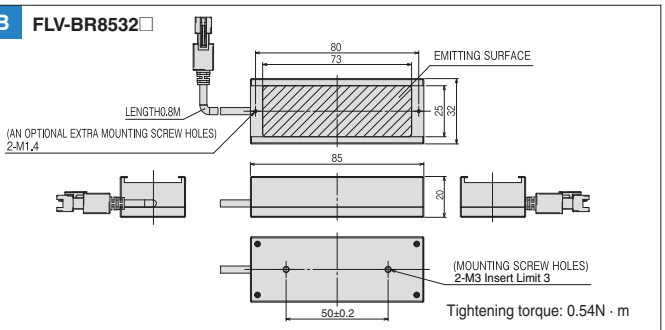

Tightening torque: 0.54N · m

C FLV-BR11222□

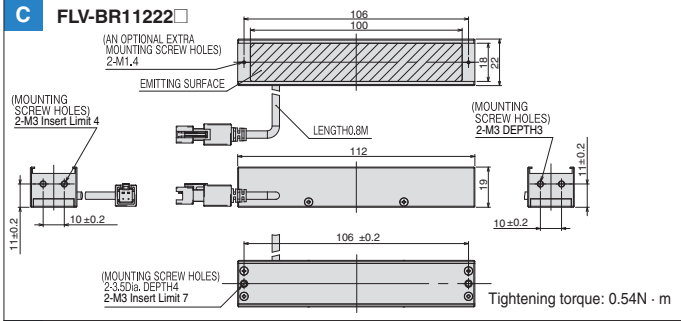

Tightening torque: 0.54N · m

D FLV-BR14030□

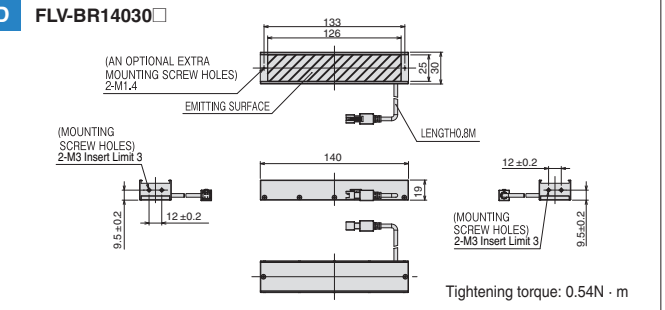

Tightening torque: 0.54N · m

E FLV-BR15020□

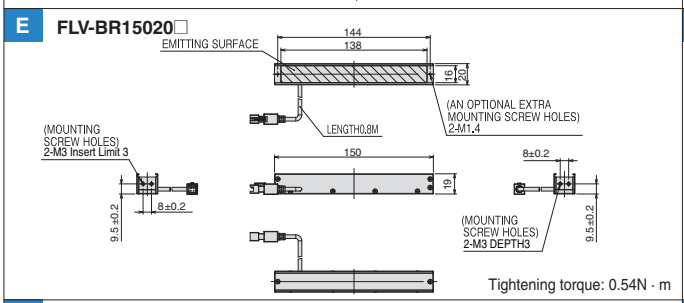

Tightening torque: 0.54N · m

F FLV-BR21222□

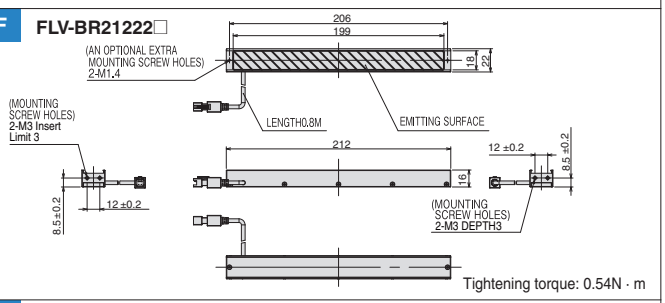

Tightening torque: 0.54N · m

G FLV-BR21230□

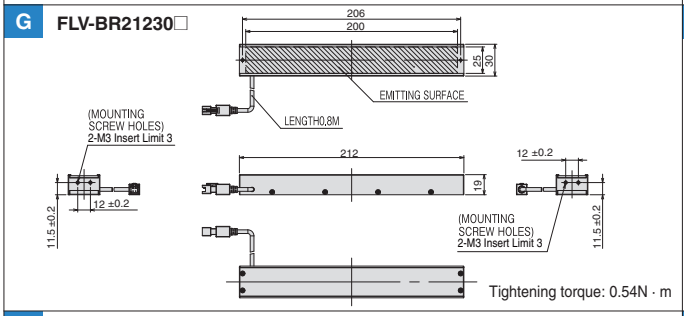

Tightening torque: 0.54N · m

H FLV-BR38037□

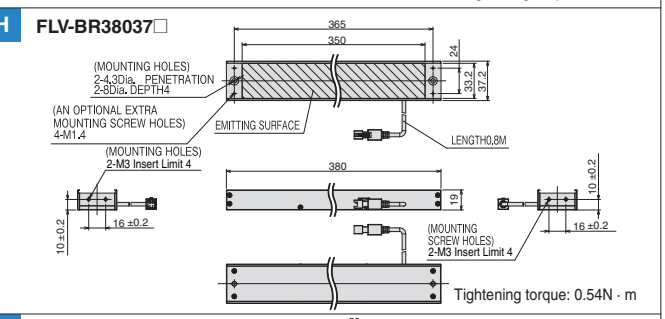

Tightening torque: 0.54N · m

I FLV-BR48031□

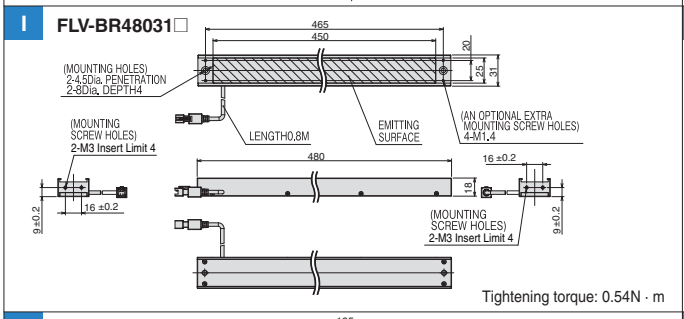

Tightening torque: 0.54N · m

J FLV-BR6424UV

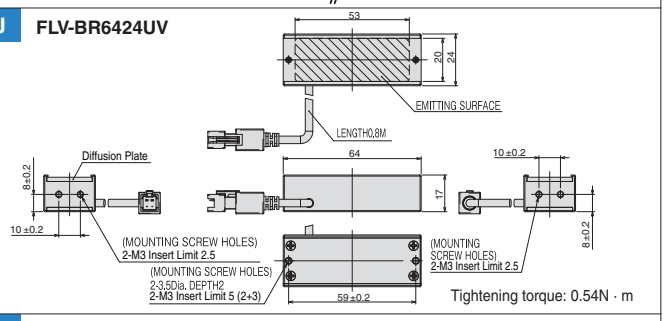

Tightening torque: 0.54N · m

K FLV-BR11624UV

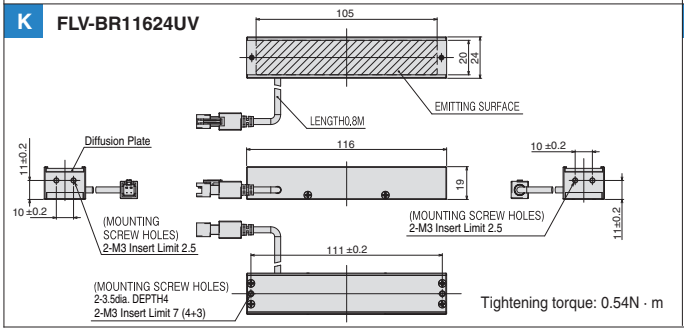

Tightening torque: 0.54N · m

L FLV-BR21230UV

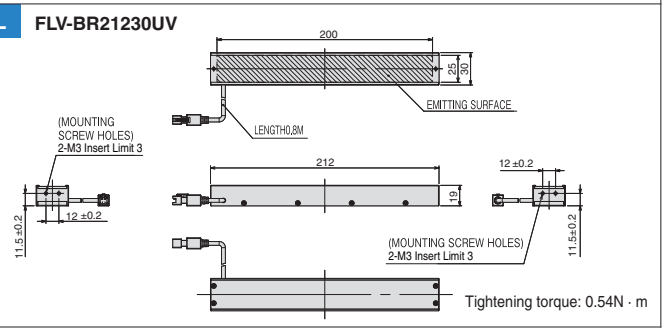

Tightening torque: 0.54N · m

Direct Ring Light

FLV-DR Series

Many shape and size variations are available to detect appearance of various workpieces.

Product Features

- Bright illumination with high-density LED arrays.
- Compact designs that save installation space.
- Optional Diffusion Plates for uniform illumination.

Cross-sectional Diagram

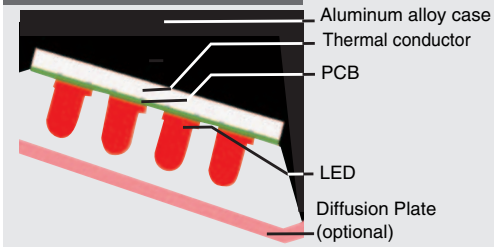

Illustration of Illumination

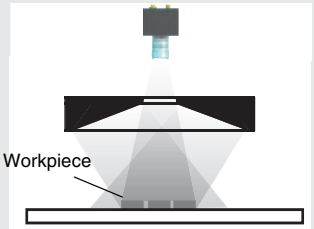

* This figure is a conceptual illustration and may vary from the actual structure.

Applications

- Detection of parts on PCBs
- Detection of parts and printing on automotive components
- Inspection of defects on mouth tops of PET bottles
- Standard character recognition and code reading

Detection of parts on PCBs

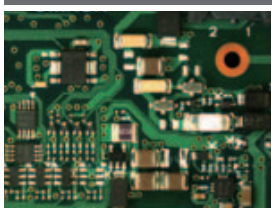

Detection of printing

Direct Ring Light FLV-DR Series

Ordering Information

Model	Color	Power consumption (W)	Dimensions				Controller *			Weight (g)	Options	
			External Ring Diameter (mm)	Internal Ring Diameter (mm)	Lighting Angle (Deg)	Drawing	FLV-TCC□	FLV-ATC□	3Z4S-LT IDGB□		Diffusion Plate	Polarization Plate
FLV-DR3220W	WHITE	1.4	32 dia.	10 dia.	20 deg.	A	○	○	○	60	○	○
FLV-DR3220R	RED	1.3					○	○	○			
FLV-DR3220B	BLUE	1.4					○	○	○			
FLV-DR4415W	WHITE	2.7	44 dia.	17 dia.	15 deg.	B	○	○	○	70	○	○
FLV-DR4415R	RED	1.7					○	○	○			
FLV-DR4415B	BLUE	2.7					○	○	○			
FLV-DR5030W	WHITE	3.1	50 dia.	26.5 dia.	30 deg.	C	○	○	○	60	○	○
FLV-DR5030R	RED	1.8					○	○	○			
FLV-DR5030B	BLUE	3.1					○	○	○			
FLV-DR5030IR	IR	1.3					○	○	○			
FLV-DR6030UV	UV	3.2	64 dia.	26.5 dia.	30 deg.	O	○	○	○	90	○	×
FLV-DR6615W	WHITE	5.0	66 dia.	31 dia.	15 deg.	D	○	○	○	120	○	○
FLV-DR6615R	RED	3.9					○	○	○			
FLV-DR6615B	BLUE	5.0					○	○	○			
FLV-DR7000W	WHITE	5.0	70 dia.	33 dia.	0 deg.	E	○	○	○	110	○	○
FLV-DR7000R	RED	3.7					○	○	○			
FLV-DR7000B	BLUE	5.0					○	○	○			
FLV-DR7030W	WHITE	5.0	70 dia.	30 dia.	30 deg.	F	○	○	○	120	○	○
FLV-DR7030R	RED	3.7					○	○	○			
FLV-DR7030B	BLUE	5.0					○	○	○			
FLV-DR7030IR	IR	2.6					○	○	○			
FLV-DR7530UV	UV	5.4	79 dia.	30 dia.	30 deg.	P	○	○	○	150	○	×
FLV-DR9000W	WHITE	8.8	90 dia.	30 dia.	0 deg.	G	○	○	○	230	○	○
FLV-DR9000R	RED	7.0					○	○	○			
FLV-DR9000B	BLUE	8.8					○	○	○			
FLV-DR9030W	WHITE	8.1	90 dia.	40 dia.	30 deg.	H	○	○	○	200	○	○
FLV-DR9030R	RED	6.6					○	○	○			
FLV-DR9030B	BLUE	8.1					○	○	○			
FLV-DR9030IR	IR	4.3					○	○	○			
FLV-DR9030UV	UV	6.8	94 dia.	40 dia.	30 deg.	Q	○	○	○	220	○	×
FLV-DR9215W	WHITE	7.4	92 dia.	47 dia.	15 deg.	I	○	○	○	200	○	○
FLV-DR9215R	RED	5.4					○	○	○			
FLV-DR9215B	BLUE	7.4					○	○	○			
FLV-DR12030W	WHITE	11.9	120 dia.	60 dia.	30 deg.	J	○	○	○	360	○	○
FLV-DR12030R	RED	9.8					○	○	○			
FLV-DR12030B	BLUE	11.9					○	○	○			

* For the connectable Lighting Controller models and conditions, refer to the Specifications pages of each Lighting Controller.
FLV-TCC□: page 32 FLV-ATC□: page 38 3Z4S-LT IDGB□: page 45

Note: Refer to page 69 for LED Characteristics.

○: Applicable ×: Not applicable

Dimensions

(Unit: mm)

A FLV-DR3220□

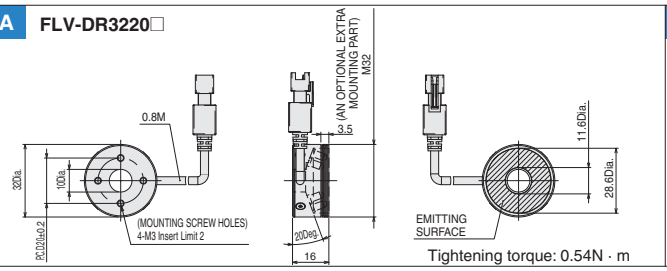

Tightening torque: 0.54N · m

B FLV-DR4415□

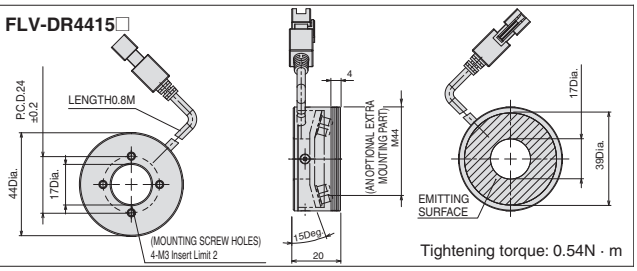

Tightening torque: 0.54N · m

Dimensions

(Unit: mm)

C FLV-DR5030□

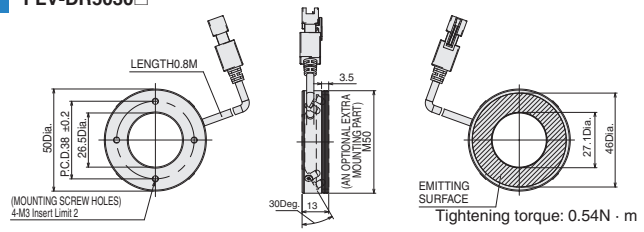

Tightening torque: 0.54N · m

D FLV-DR6615□

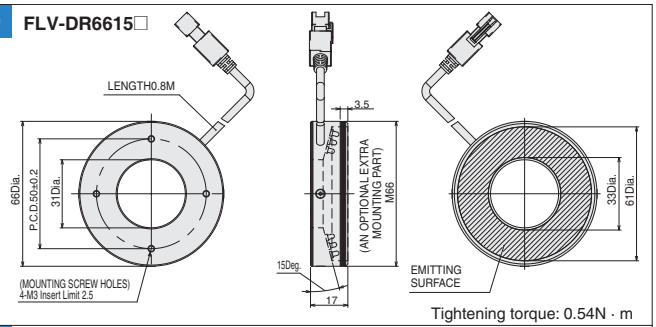

Tightening torque: 0.54N · m

E FLV-DR7000□

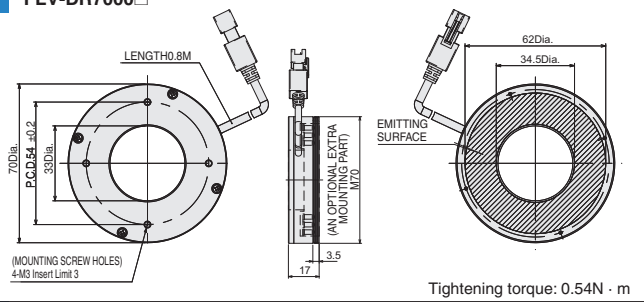

Tightening torque: 0.54N · m

F FLV-DR7030□

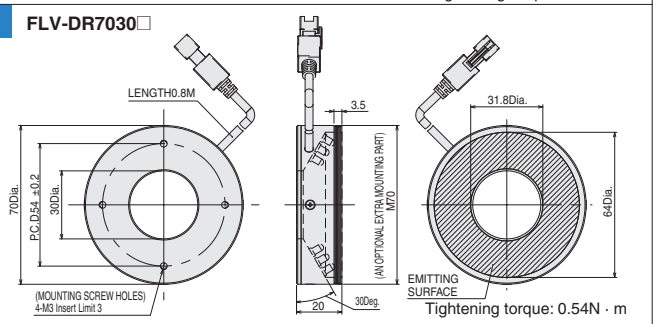

Tightening torque: 0.54N · m

G FLV-DR9000□

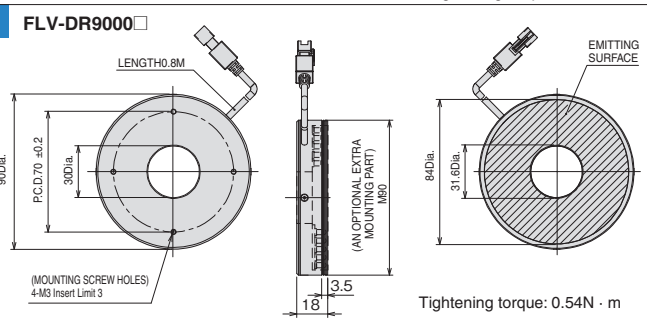

Tightening torque: 0.54N · m

H FLV-DR9030□

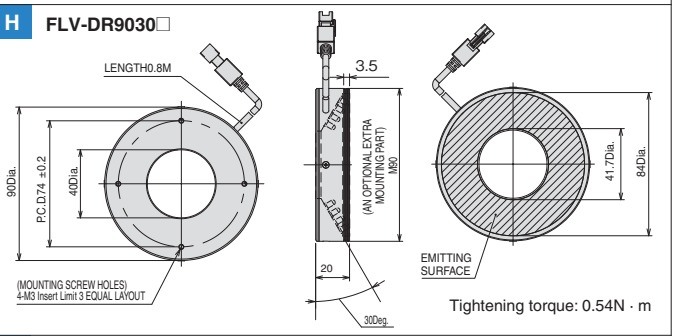

Tightening torque: 0.54N · m

I FLV-DR9215□

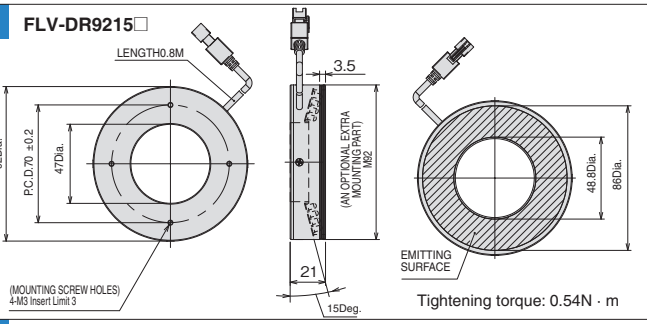

Tightening torque: 0.54N · m

J FLV-DR12030□

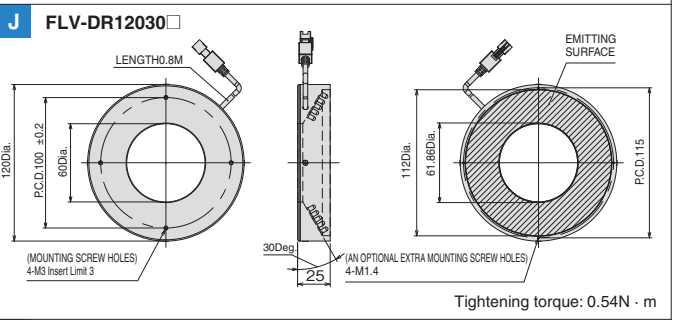

Tightening torque: 0.54N · m

O FLV-DR6030UV

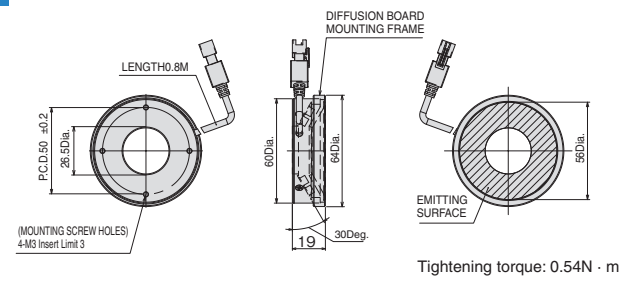

Tightening torque: 0.54N · m

P FLV-DR7530UV

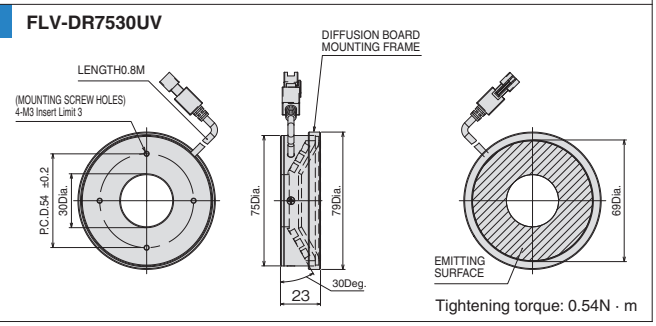

Tightening torque: 0.54N · m

Q FLV-DR9030UV

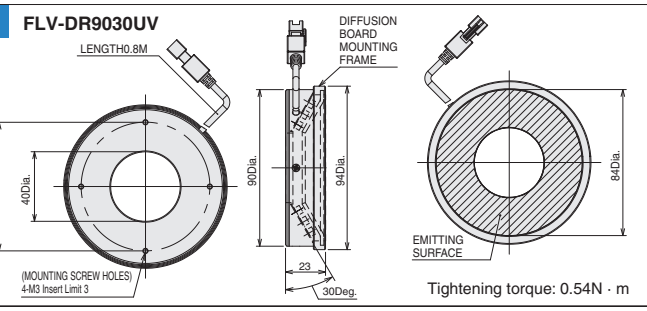

Tightening torque: 0.54N · m

Low Angle Ring Light

FLV-DL Series

Angled or horizontal illumination emphasizes defects and profiles of workpieces.

Product Features

- Bright illumination with high-density LED arrays.
- Compact designs that save installation space.
- Optional Diffusion Plates for uniform illumination.

Cross-sectional Diagram

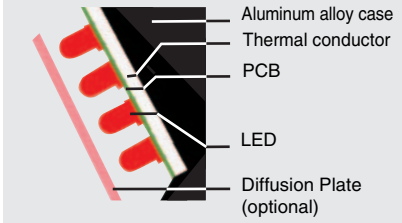

Illustration of Illumination

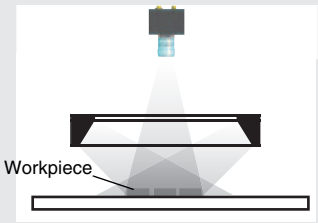

* This figure is a conceptual illustration and may vary from the actual structure.

Applications

- Detection of marking and defects on surfaces of metal workpieces
- Detection of foreign matter in medicines
- Detection of chips on circumference of O rings

Surface and profile inspection of metal workpieces

Ring Light

Low Angle Ring Light

Ordering Information

Model	Color	Power consumption (W)	Dimensions				Controller *			Weight (g)	Options	
			External Ring Diameter (mm)	Internal Ring Diameter (mm)	Lighting Angle (Deg)	Drawing	FLV-TCC□	FLV-ATC□	3Z4S-LT IDGB□		Diffusion Plate	Polarization Plate
FLV-DL5890W	WHITE	1.9	58 dia.	27 dia.	90 deg.	J	○	○	○	90	○	×
FLV-DL5890R	RED	1.3					○	○	○			
FLV-DL5890B	BLUE	1.9					○	○	○			
FLV-DL7260W	WHITE	5.7	72 dia.	44 dia.	60 deg.	K	○	○	○	120	○	○
FLV-DL7260R	RED	3.9					○	○	○			
FLV-DL7260B	BLUE	5.7					○	○	○			
FLV-DL9090W	WHITE	2.8	90 dia.	50 dia.	90 deg.	L	○	○	○	100	×	×
FLV-DL9090R	RED	1.8					○	○	○			
FLV-DL9090B	BLUE	2.8					○	○	○			
FLV-DL12060W	WHITE	12.7	120 dia.	67 dia.	60 deg.	M	○	○	○	310	○	○
FLV-DL12060R	RED	10.5					○	○	○			
FLV-DL12060B	BLUE	12.7					○	○	○			
FLV-DL15060W	WHITE	13.6	150 dia.	108 dia.	60 deg.	N	○	○	○	260	○	○
FLV-DL15060R	RED	11.2					○	○	○			
FLV-DL15060B	BLUE	13.6					○	○	○			

* For the connectable Lighting Controller models and conditions, refer to the Specifications pages of each Lighting Controller.
FLV-TCC□:page 32 FLV-ATC□: page38 3Z4S-LT IDGB□: page 45
Note: Refer to page 69 for LED Characteristics.
○: Applicable ×: Not applicable

Dimensions

(Unit: mm)

J FLV-DL5890□

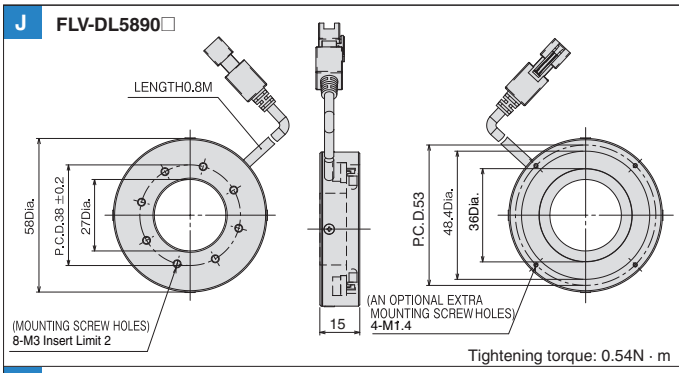

Tightening torque: 0.54N · m

K FLV-DL7260□

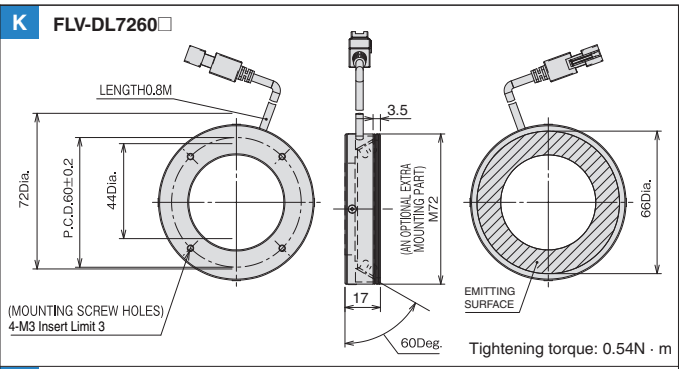

Tightening torque: 0.54N · m

L FLV-DL9090□

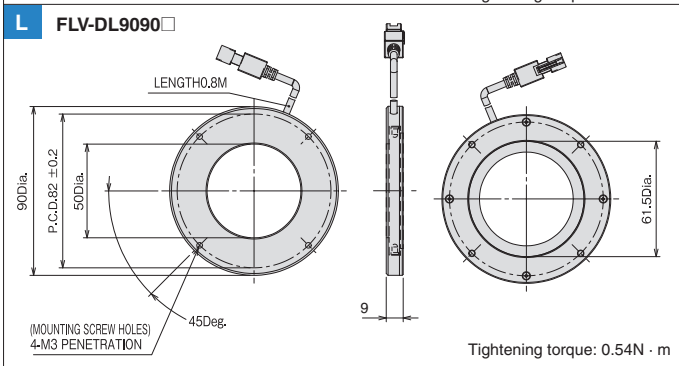

Tightening torque: 0.54N · m

M FLV-DL12060□

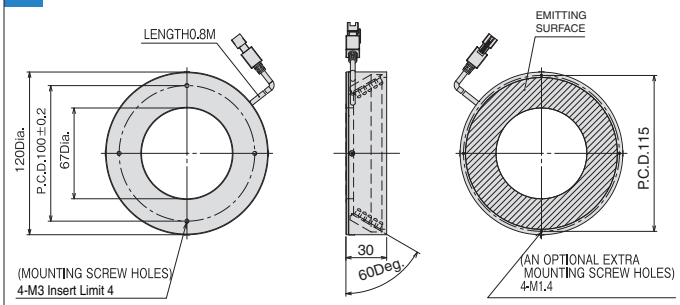

Tightening torque: 0.54N · m

N FLV-DL15060□

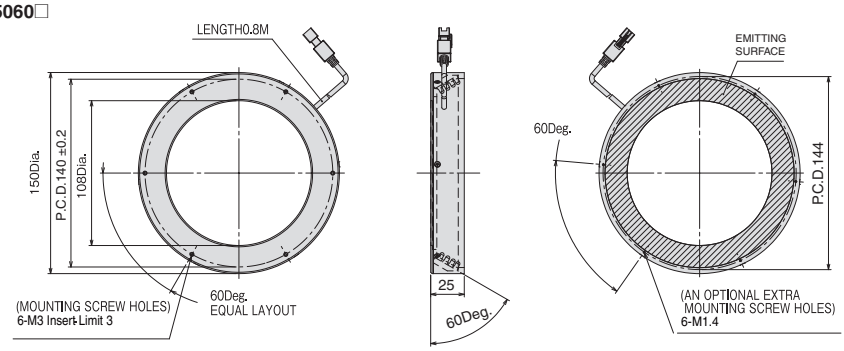

Tightening torque: 0.54N · m

Coaxial Light

FLV-CL Series

Coaxial illumination with the Lens helps prevent interference from reflected light. This series is ideal for surface damage and character inspections on highly reflective workpieces with mirror-like surfaces.

Product Features

- Long life and stability result from a structure with optimum heat dissipation.
- Uniform illumination for clear images.

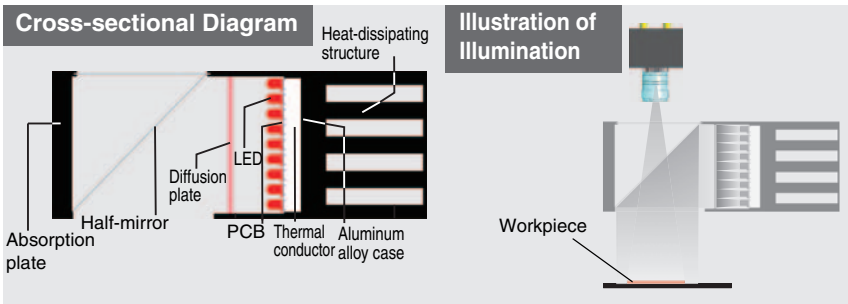

* This figure is a conceptual illustration and may vary from the actual structure.

Applications

- Inspection for scratches on highly reflective surfaces
- Inspection for damages on chips and silicon wafers
- Detection of positioning marks
- Recognition of bar codes on packages
- Recognition of laser-marked characters and 2D DMP codes
- General exterior detection

BGA Inspection

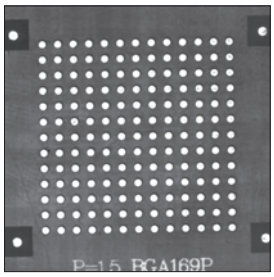

Recognition of 2D DPM Code

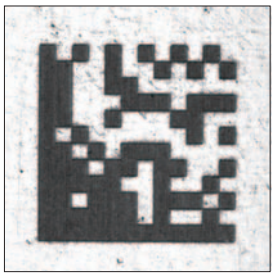

Positioning for Metal Welding

Ordering Information

Model	Color	Power consumption (W)	Dimension				Controller *			Weight (g)
			Lighting Area Dimension (mm)	Outside Dimension (mm)	Height (mm)	Drawing	FLV-TCC□	FLV-ATC□	3Z4S-LT IDGB□	
FLV-CL30W	WHITE	2.4	24×25	32×59.5	31	A	○	○	○	110
FLV-CL30R	RED	1.4					○	○	○	
FLV-CL30B	BLUE	2.4					○	○	○	
FLV-CL40W	WHITE	3.9	34×34	40×74	40	B	○	○	○	170
FLV-CL40R	RED	2.3					○	○	○	
FLV-CL40B	BLUE	3.9					○	○	○	
FLV-CL60W	WHITE	10.4	51×52	58×104	60.5	C	○	○	○	380
FLV-CL60R	RED	5.7					○	○	○	
FLV-CL60B	BLUE	10.4					○	○	○	
FLV-CL60IR	IR	3.9					○	○	○	
FLV-CL60UV	UV	3.0					○	○	○	
FLV-CL80W	WHITE	10.8	72×72	78×124	77.5	D	○	○	○	580
FLV-CL80R	RED	7.2					○	○	○	
FLV-CL80B	BLUE	10.8					○	○	○	
FLV-CL100W	WHITE	22.7	92×92	98×141	99.5	E	×	○	○	820
FLV-CL100R	RED	15.2					×	○	○	
FLV-CL100B	BLUE	22.7					×	○	○	

* For the connectable Lighting Controller models and conditions, refer to the Specifications pages of each Lighting Controller.
FLV-TCC□: page 32 FLV-ATC□: page 38 3Z4S-LT IDGB□: page 45
Note: Refer to page 69 for LED Characteristics.
○: Connectable ×: Not connectable

Dimensions

(Unit: mm)

A FLV-CL30□

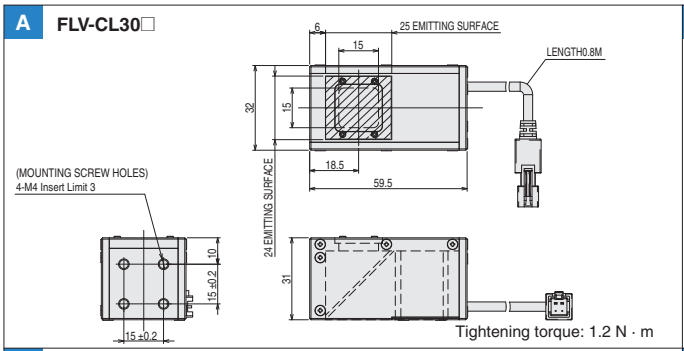

Tightening torque: 1.2 N · m

B FLV-CL40□

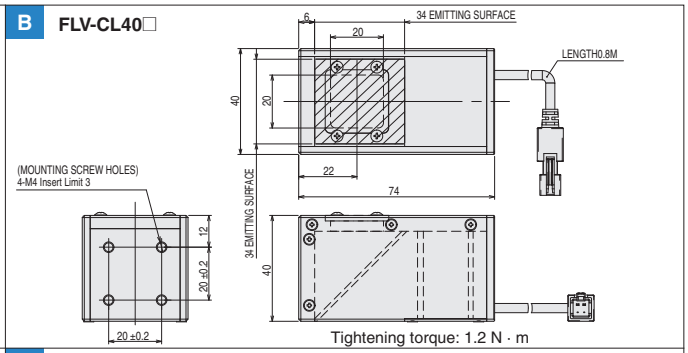

Tightening torque: 1.2 N · m

C FLV-CL60□

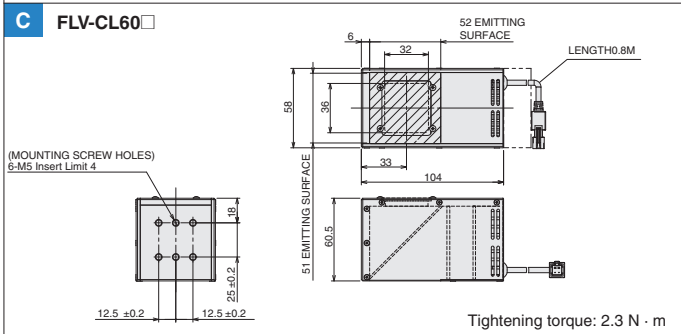

Tightening torque: 2.3 N · m

D FLV-CL80□

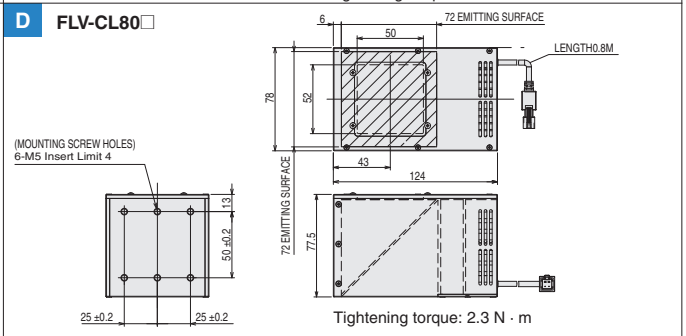

Tightening torque: 2.3 N · m

E FLV-CL100□

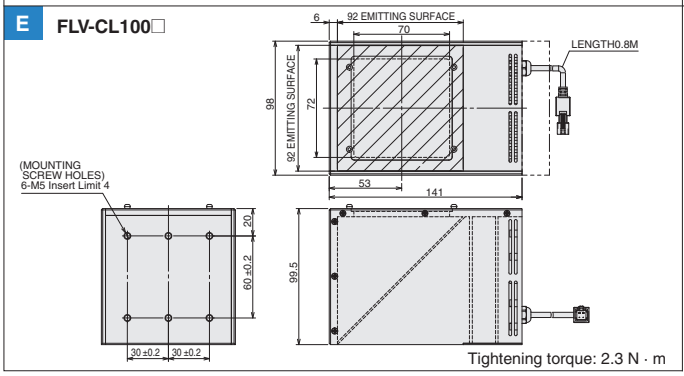

Tightening torque: 2.3 N · m

Shadowless Ring Light

FLV-FR Series

This series effectively eliminates the influences of localized reflections for the surfaces of small workpieces.

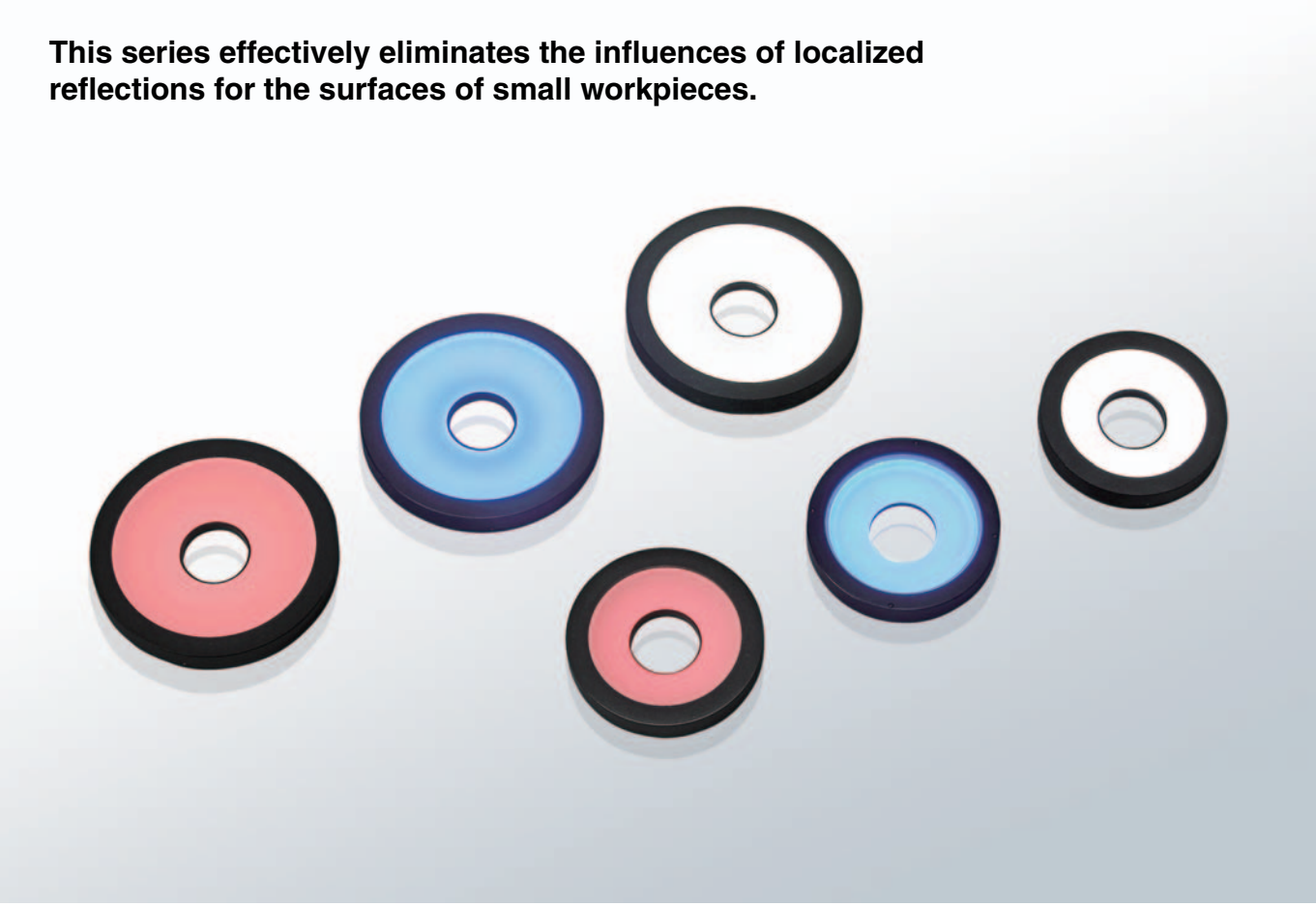

Product Features

- Special diffusion plates create greater uniformity in lighting than normal ring lighting.

Cross-sectional Diagram

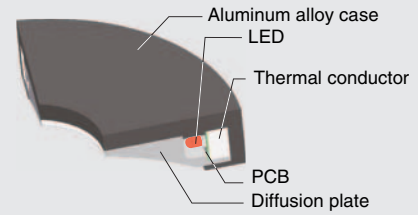

Illustration of Illumination

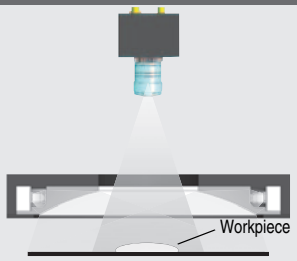

* This figure is a conceptual illustration and may vary from the actual structure.

Applications

Character inspections on electronic components or formed plastic parts

Character Detection on Capacitor Surface

Image with Normal Ring Lighting

Image with the FLV-FR114R

Ordering Information

Model	Color	Power consumption (W)	Dimensions				Controller *			Weight (g)
			External Ring Diameter (mm)	Internal Ring Diameter (mm)	Lighting Area Diameter (mm)	Drawing	FLV-TCC□	FLV-ATC□	3Z4S-LT IDGB□	
FLV-FR114W	WHITE	3.9	114 dia.	40 dia.	92 dia.	A	○	○	○	270
FLV-FR114R	RED	3.1					○	○	○	
FLV-FR114B	BLUE	3.9					○	○	○	
FLV-FR150W	WHITE	6.1	150 dia.	40 dia.	123 dia.	B	○	○	○	500
FLV-FR150R	RED	3.5					○	○	○	
FLV-FR150B	BLUE	6.1					○	○	○	

* For the connectable Lighting Controller models and conditions, refer to the Specifications pages of each Lighting Controller.
FLV-TCC□: page 32
FLV-ATC□: page 38
3Z4S-LT IDGB□: page 45
Note: Refer to page 69 for LED Characteristics.
○: Connectable

Dimensions

(Unit: mm)

A **FLV-FR114□**

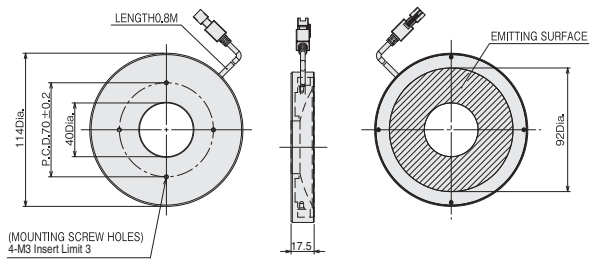

Tightening torque: 0.54N · m

B **FLV-FR150□**

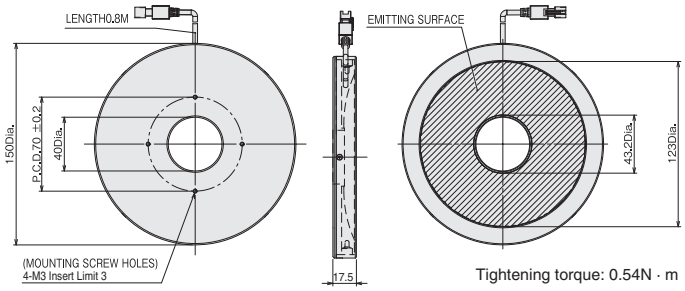

Tightening torque: 0.54N · m

Shadowless Low Angle Ring Light
FLV-FP Series

This series achieves highly uniform illumination across a wide field of view.
Excellent symmetry eliminates diagonal shadows.

Product Features

- Shadowless Ring Lighting
- Achieve highly uniform illumination and obtain different images at different installation distances for a much wider range of application compared to normal ring lighting.

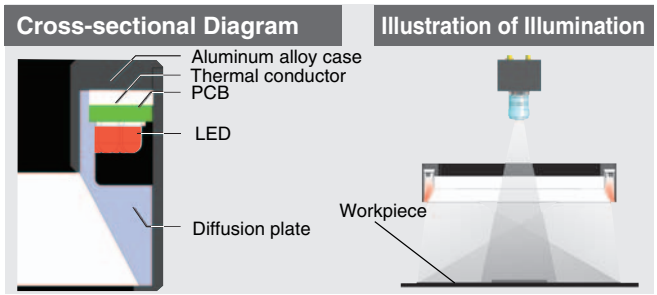

* This figure is a conceptual illustration and may vary from the actual structure.

Ordering Information

Model	Light Color	Power consumption (W)	Dimensions				Controller *			Weight (g)
			External Ring Diameter (mm)	Internal Ring Diameter (mm)	Lighting Area Diameter (mm)	Drawing	FLV-TCC□	FLV-ATC□	3Z4S-LT IDGB□	
FLV-FP130W	WHITE	8.1	130 dia.	100 dia.	120 dia.	A	○	○	○	320
FLV-FP130R	RED	5.8					○	○	○	
FLV-FP130B	BLUE	8.1					○	○	○	

* For the connectable Lighting Controller models and conditions, refer to the Specifications pages of each Lighting Controller.
FLV-TCC□: page 32 FLV-ATC□: page 38 3Z4S-LT IDGB□: page 45
Note: Refer to page 69 for LED Characteristics.
○: Connectable

Applications

- Detection of bumps, scratches, and other defects on surfaces
- Recognition of marks
- Recognition of printed characters
- Recognition of barcodes

Recognition of Marked Characters

Dimensions

(Unit: mm)

A FLV-FP130□

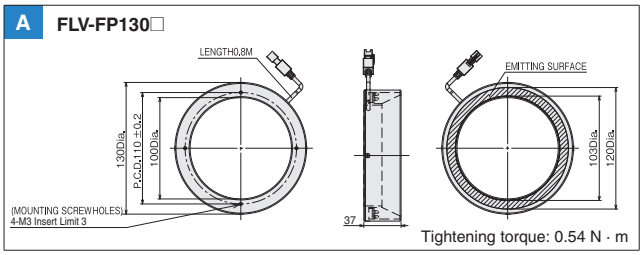

Tightening torque: 0.54 N · m

Shadowless Dome Ring Light
FLV-FS Series

Highly uniform illumination eliminates the influences of small surface irregularities to highlight features through changes in inclination.

Product Features

- Uniquely designed diffusion plate achieve highly uniform illumination through reflection and diffusion.
- Eliminates the influences of small surface irregularities to highlight features through large differences in inclination.
- Saves space for small workpieces while achieving the benefits of dome lighting.

Cross-sectional Diagram

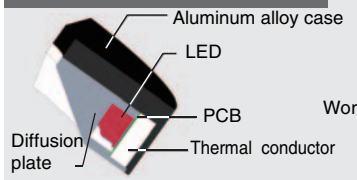

Illustration of Illumination

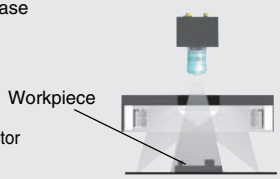

* This figure is a conceptual illustration and may vary from the actual structure.

Ordering Information

Model	Color	Power consumption (W)	Dimensions				Controller *			Weight (g)
			External Ring Diameter (mm)	Internal Ring Diameter (mm)	Lighting Area Diameter (mm)	Drawing	FLV-TCC□	FLV-ATC□	3Z4S-LT IDGB□	
FLV-FS74W	WHITE	5.2	74 dia.	20 dia.	64 dia.	A	○	○	○	140
FLV-FS74R	RED	3.5					○	○	○	
FLV-FS74B	BLUE	5.2					○	○	○	

* For the connectable Lighting Controller models and conditions, refer to the Specifications pages of each Lighting Controller.
FLV-TCC□: page 32 FLV-ATC□: page 38 3Z4S-LT IDGB□: page 45
Note: Refer to page 69 for LED Characteristics.
○: Connectable

Applications

- Edge positioning and size measurement for metal parts
- Detection of bumps in metal parts

Gap Position Detection on Multilayered Shafts

Dimensions

(Unit: mm)

A FLV-FS74□

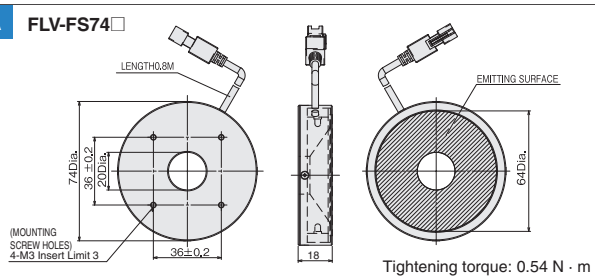

Tightening torque: 0.54 N · m

Shadowless Square Light

FLV-FQ Series

This series achieves wide highly uniform illumination across a square field of view.

Product Features

- Shadowless Square Lighting
- Achieves highly uniform illumination and obtains different images at different installation distances for a much wider range of applications compared to normal ring lighting.

Cross-sectional Diagram

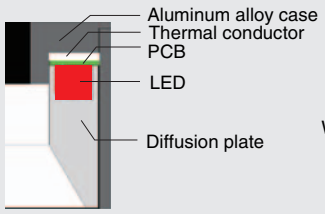

Illustration of Illumination

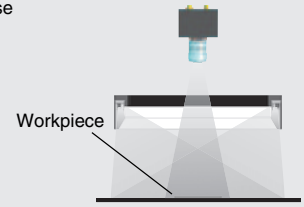

* This figure is a conceptual illustration and may vary from the actual structure.

Ordering Information

Model	Color	Power consumption (W)	Dimensions				Controller *			Weight (g)
			Lighting Area Dimension (mm)	Outside Dimension (mm)	Height (mm)	Drawing	FLV-TCC□	FLV-ATC□	3Z4S-LT IDGB□	
FLV-FQ48W	WHITE	2.0	41×41	48 × 48	30	A	○	○	○	100
FLV-FQ48R	RED	1.2					○	○	○	
FLV-FQ48B	BLUE	2.0					○	○	○	

* For the connectable Lighting Controller models and conditions, refer to the Specifications pages of each Lighting Controller.
FLV-TCC□: page 32 FLV-ATC□: page 38 3Z4S-LT IDGB□: page 45
Note: Refer to page 69 for LED Characteristics.
○: Connectable

Applications

Detection of defects on workpiece surfaces

Recognition of printed characters and bar codes

Appearance Inspections of Chip Components

Dimensions

(Unit: mm)

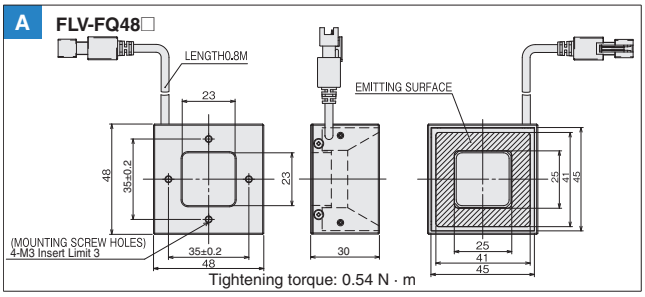

Spot Light

FLV-EP50 Series

Long-distance Spot Lighting
This series achieves uniform, parallel light.

Product Features

- Superior directional characteristic, essentially parallel light, and long-distance illumination.

Cross-sectional Diagram

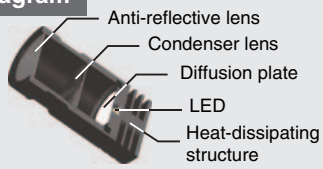

*This figure is a conceptual illustration and may vary from the actual structure.

Illustration of Illumination

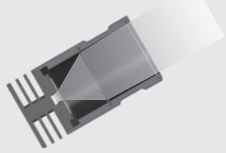

Ordering Information

Model	Color	Power consumption (W)	Dimensions				Controller *			Weight (g)
			Lighting Area Dimension (mm)	Outside Dimension (mm)	Height (mm)	Drawing	FLV-TCC□	FLV-ATC□	3Z4S-LT IDGB□	
FLV-EP50W	WHITE	1.6	40 dia.	50 dia.	94.5	A	○	○	×	200
FLV-EP50R	RED	1.1					○	○	×	

* For the connectable Lighting Controller models and conditions, refer to the Specifications pages of each Lighting Controller.
FLV-TCC□: page 32 FLV-ATC□: page 38 3Z4S-LT IDGB□: page 45
Note: Refer to page 69 for LED Characteristics.
○: Connectable

Applications

Size measurements of small workpieces

Detection of defects on surfaces

Detection of Gaps in Small Parts

Detection of Scratches on Card Surfaces

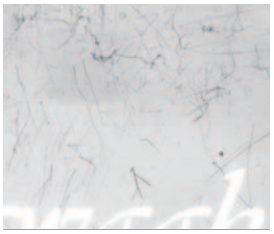

Dimensions

(Unit: mm)

A FLV-EP50□

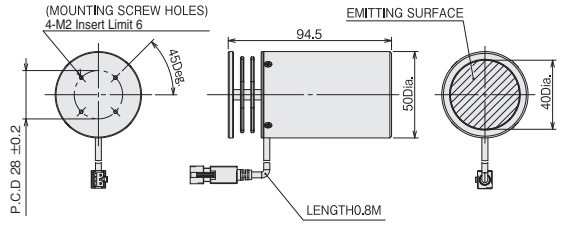

Tightening torque: 0.15 N · m

High-power Spot Light

FLV-EP08 Series

High-power, Compact Spot Light Sources.

Product Features

- High-power LEDs generate strong light with a compact design.
- Ideal for applications in combination with a Coaxial Lens.
- Highly efficient heat-dissipating structure ensures a long life.

Cross-sectional Diagram

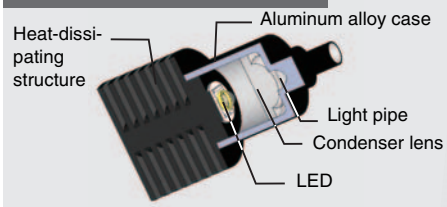

Illustration of Illumination

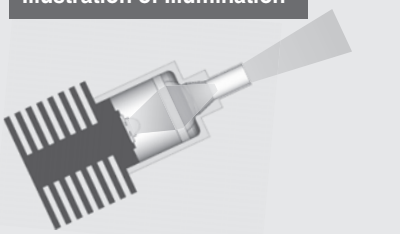

* This figure is a conceptual illustration and may vary from the actual structure.

Applications

- Detection of alignment marks
- Detection of chips
- Detection of defects on workpiece surfaces

Illustration of Illumination in Combination with a Coaxial Lens

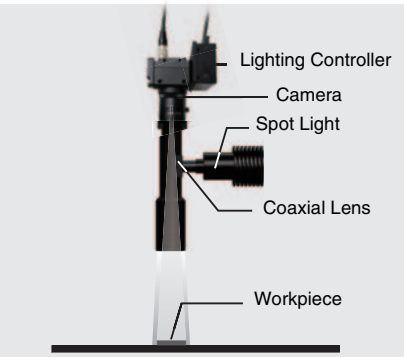

Simplified Illustration of Detection of Bubbles in Transparent Material

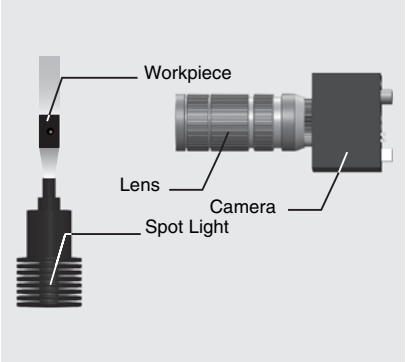

Recognition of Alignment Marks

Inspection for Defects

Detection of Air Bubbles and Impurities

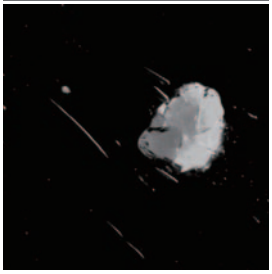

Ordering Information

Model	Color	Power consumption (W)	Dimensions				Controller *			Weight (g)
			Lighting Area Dimension (mm)	Outside Dimension (mm)	Height (mm)	Drawing	FLV-TCC□	FLV-ATC□	3Z4S-LT IDGB□	
FLV-EP0803W	WHITE	1.6	6.8 dia.	28 dia.	60	A	○	○	×	80
FLV-EP0803R	RED	1.1					○	○	×	
FLV-EP0803B	BLUE	1.6					○	○	×	

* For the connectable Lighting Controller models and conditions, refer to the Specifications pages of each Lighting Controller.
FLV-TCC□: page 32
FLV-ATC□: page 38
3Z4S-LT IDGB□: page 45
Note: Refer to page 69 for LED Characteristics.
○: Connectable

Dimensions

(Unit: mm)

A **FLV-EP0803□**

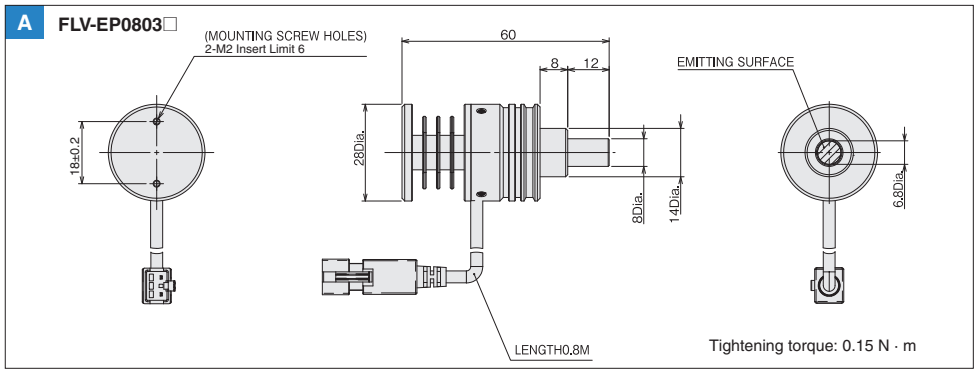

Direct Back Light

FLV-DB Series

Uniform Illumination from a Flat Emitting Surface
Illumination from the back of the workpiece produces a high-contrast silhouette.

Product Features

- Highly uniform backlighting with high-density LED arrays. Emphasizes the outline features of workpieces.

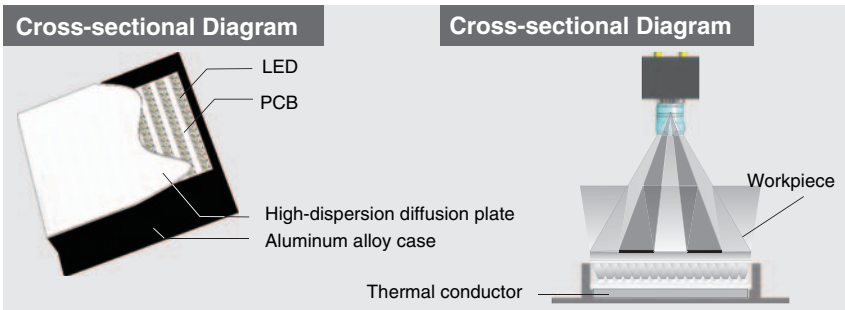

* This figure is a conceptual illustration and may vary from the actual structure.

Applications

- Size measurements of machine parts
- Shape detections for electronic components and ICs
- Dirt detection on films

Detection of Connector Circuits

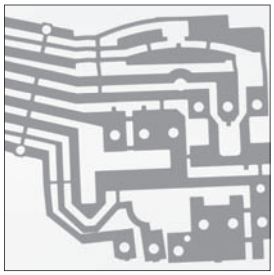

Detection of Abrasion Wear on Gears

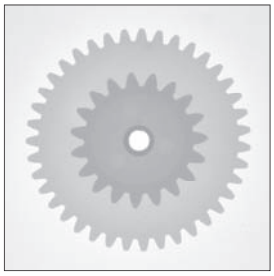

Inspection of Bottles

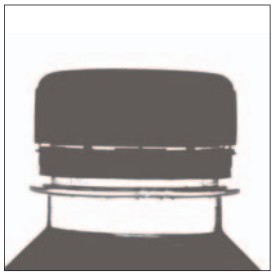

Ordering Information

Model	Color	Power consumption (W)	Dimensions				Controller *			Weight (g)
			Lighting Area Dimension (mm)	Outside Dimension (mm)	Height (mm)	Drawing	FLV-TCC□	FLV-ATC□	3Z4S-LT IDGB□	
FLV-DB3729W	WHITE	0.9	27×27	37×37	15	A	○	○	○	50
FLV-DB3729R	RED	0.9					○	○	○	
FLV-DB3729B	BLUE	0.9					○	○	○	
FLV-DB10181W	WHITE	8.1	73×73	101 ×81	17	B	○	○	○	160
FLV-DB10181R	RED	4.7					○	○	○	
FLV-DB10181B	BLUE	8.1					○	○	○	
FLV-DB130130W	WHITE	13.0	114 ×120	144×126	17	C	○	○	○	270
FLV-DB130130R	RED	11.5					○	○	○	
FLV-DB130130B	BLUE	13.0					○	○	○	
FLV-DB212152W	WHITE	29.4	200×120	212×152	17	D	×	○	○	510
FLV-DB212152R	RED	20.2					×	○	○	
FLV-DB212152B	BLUE	29.4					×	○	○	

* For the connectable Lighting Controller models and conditions, refer to the Specifications pages of each Lighting Controller
FLV-TCC□: page 32
FLV-ATC□: page 38
3Z4S-LT IDGB□: page 45
Note: Refer to page 69 for LED Characteristics.
○: Connectable ×: Not connectable

Dimensions

(Unit: mm)

A FLV-DB3729□

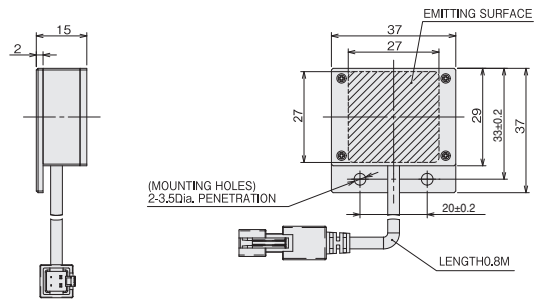

B FLV-DB10181□

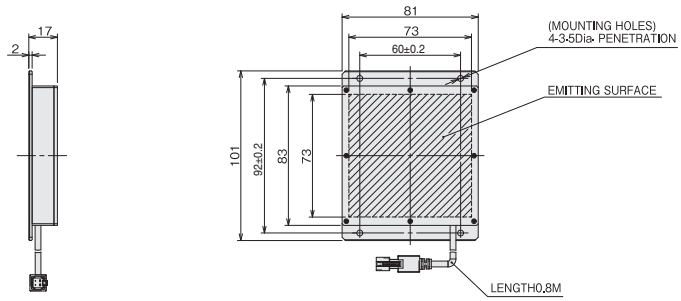

C FLV-DB130130□

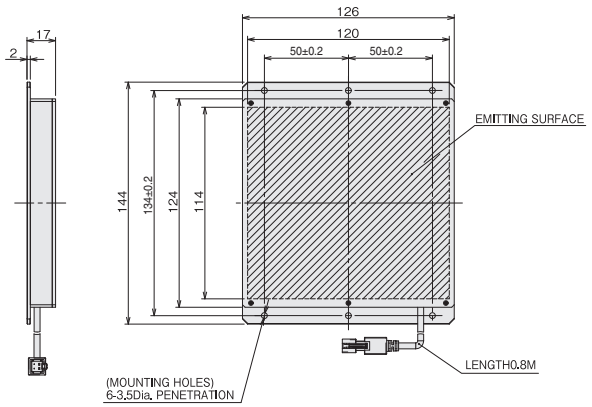

D FLV-DB212152□

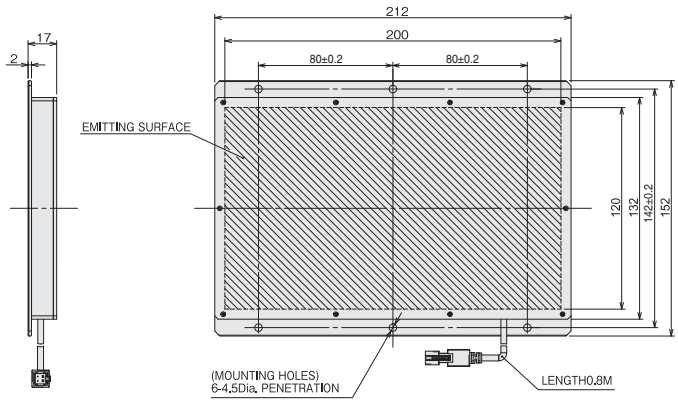

Edge Type Light

FLV-FB Series

Ultrathin, Highly Uniform Backlights
Thin enough to conveniently fit into narrow spaces.

Product Features

- Five size variations with emitting surfaces from 35 mm square to 164 mm square.
- As thin as 8 mm (FLV-FB7070).

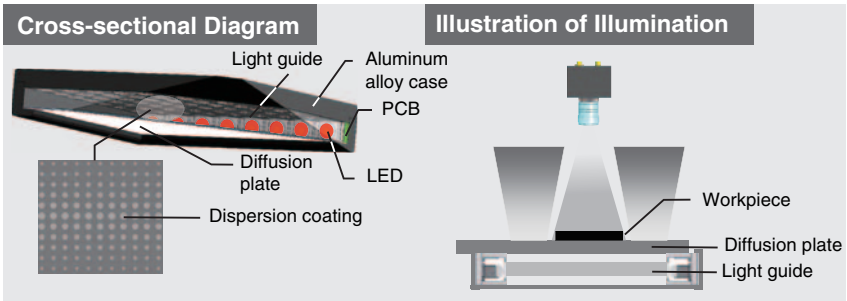

* This figure is a conceptual illustration and may vary from the actual structure.

Applications

Detection and size measurements of electronic devices

Detection of LCD dead pixels

Detection of Silkscreen Patterns on Cell Phone PCBs

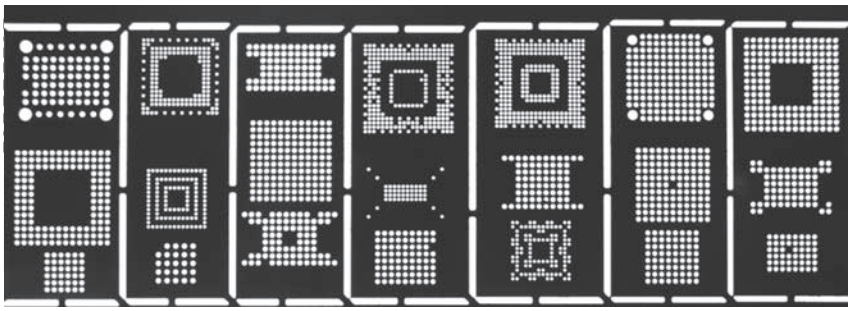

Ordering Information

Model	Color	Power consumption (W)	Dimensions				Controller *			Weight (g)
			Lighting Area Dimension (mm)	Outside Dimension (mm)	Height (mm)	Drawing	FLV-TCC□	FLV-ATC□	3Z4S-LT IDGB□	
FLV-FB5050W	WHITE	1.9	35×35	50×50	11	A	○	○	○	75
FLV-FB5050R	RED	0.9					○	○	○	
FLV-FB5050B	BLUE	1.9					○	○	○	
FLV-FB7070W	WHITE	1.9	46×46	70×70	8	B	○	○	○	85
FLV-FB7070R	RED	1.4					○	○	○	
FLV-FB7070B	BLUE	1.9					○	○	○	
FLV-FB9090W	WHITE	3.7	66×66	90×90	10	C	○	○	○	155
FLV-FB9090R	RED	1.9					○	○	○	
FLV-FB9090B	BLUE	3.7					○	○	○	
FLV-FB130130W	WHITE	5.5	94×94	130×130	10	D	○	○	○	230
FLV-FB130130R	RED	3.7					○	○	○	
FLV-FB130130B	BLUE	5.5					○	○	○	
FLV-FB200200W	WHITE	7.3	164×164	200×200	11	E	○	○	○	710
FLV-FB200200R	RED	5.5					○	○	○	
FLV-FB200200B	BLUE	7.3					○	○	○	

* For the connectable Lighting Controller models and conditions, refer to the Specifications pages of each Lighting Controller.
FLV-TCC□: page 32 FLV-ATC□: page 38 3Z4S-LT IDGB□: page 45
Note: Refer to page 69 for LED Characteristics.
○: Connectable

Dimensions

(Unit: mm)

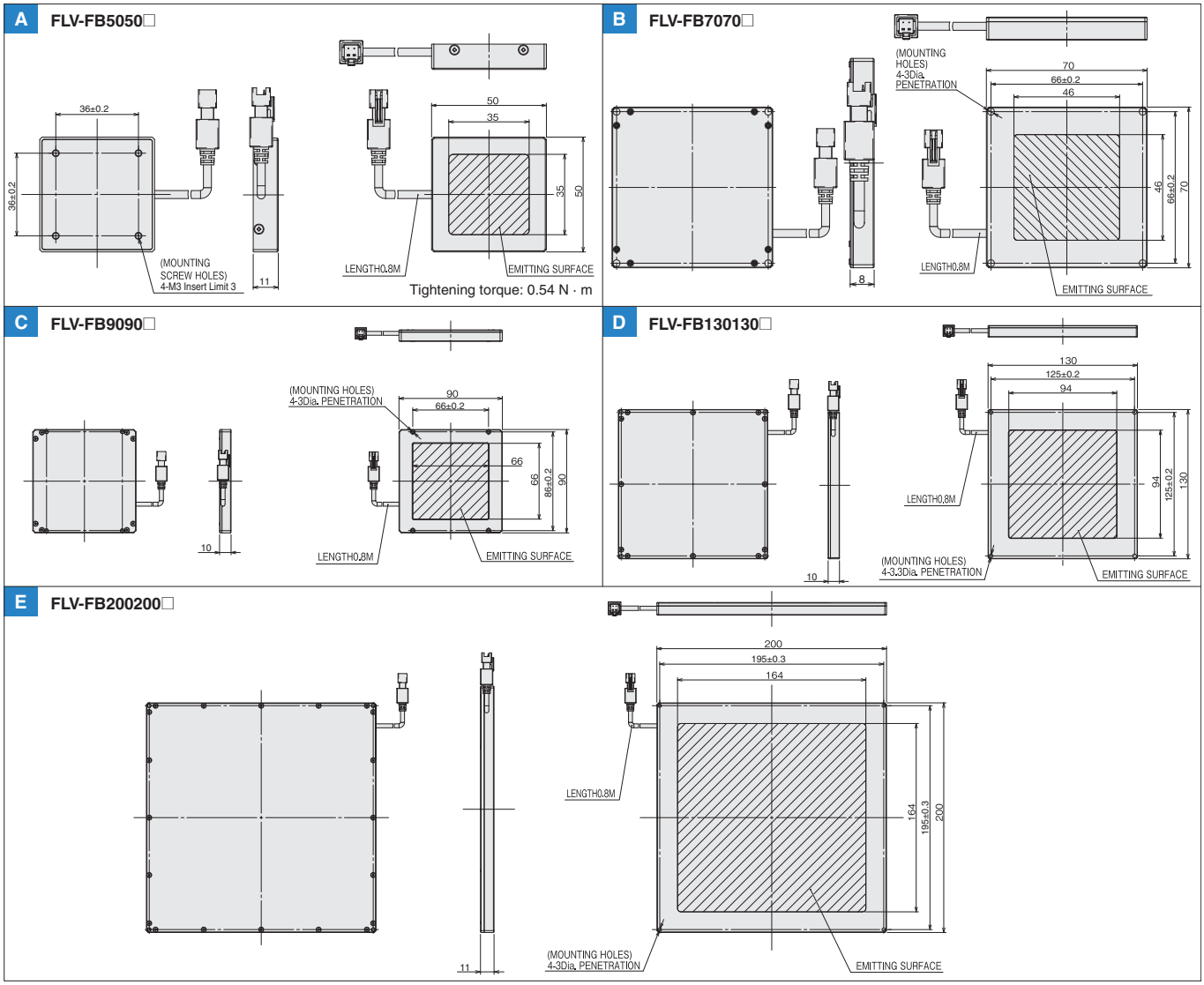

Edge Type Coaxial Light

FLV-FX Series

This series features a wide range of applications with many effects, such as backlighting and coaxial lighting.

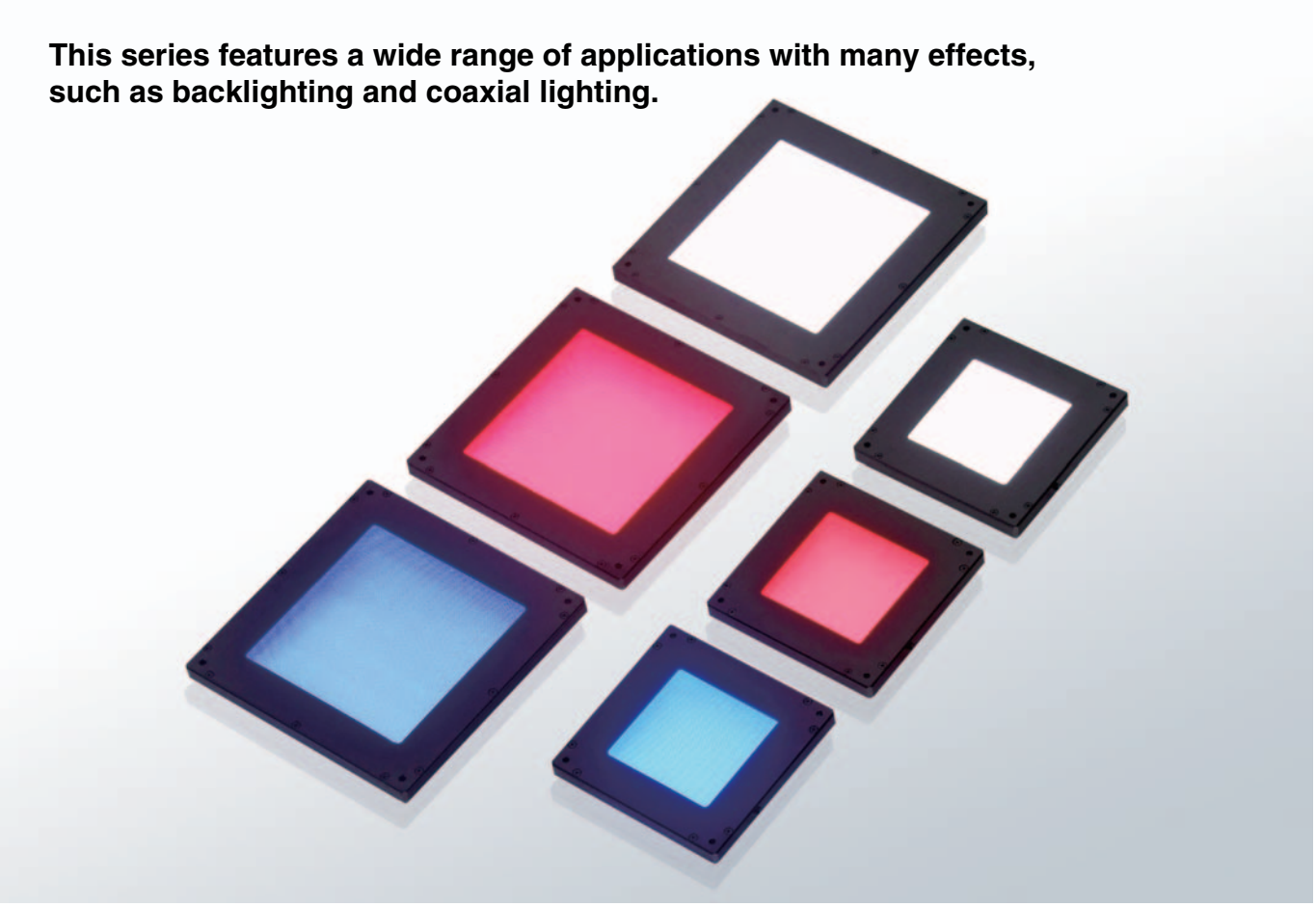

Product Features

- High uniformity with diffused illumination.
- Achieves both shadowless and coaxial illumination.
- Lightweight and compact to conveniently fit into narrow spaces

Cross-sectional Diagram

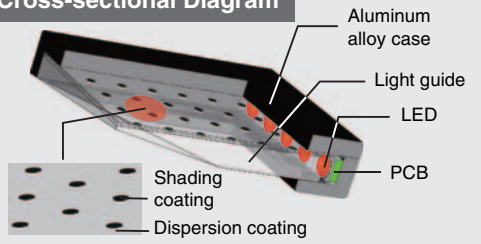

Illustration of Illumination

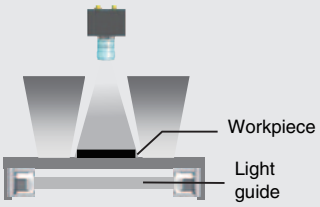

* This figure is a conceptual illustration and may vary from the actual structure.

Applications

Package inspections for foodstuffs, cigarettes, and household chemicals

Appearance inspections of home appliance cases and components

Detection, measurement, and recognition of characters and figures on highly reflective, uneven surfaces

Detection of Mounting Hole Positions

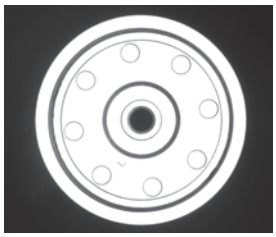

Inspections for Defects on Metal Parts

Inspections for Defects on Plated Parts

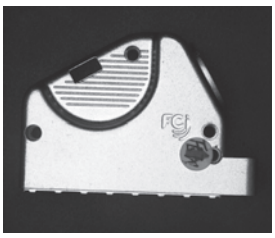

Recognition of Metal Characters and Patterns on Plastic Surfaces

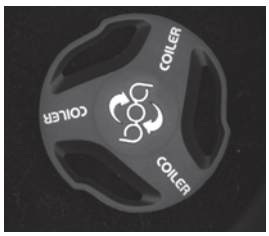

Ordering Information

Model	Color	Power consumption (W)	Dimensions				Controller *			Weight (g)
			Lighting Area Dimension (mm)	Outside Dimension (mm)	Height (mm)	Drawing	FLV-TCC□	FLV-ATC□	3Z4S-LT IDGB□	
FLV-FX100W	WHITE	3.7	60×60	100×100	11	A	○	○	○	180
FLV-FX100R	RED	1.9					○	○	○	
FLV-FX100B	BLUE	3.7					○	○	○	
FLV-FX143W	WHITE	5.5	100×100	143×143	11	B	○	○	○	240
FLV-FX143R	RED	3.7					○	○	○	
FLV-FX143B	BLUE	5.5					○	○	○	

* For the connectable Lighting Controller models and conditions, refer to the Specifications pages of each Lighting Controller.
FLV-TCC□: page 32
FLV-ATC□: page 38
3Z4S-LT IDGB□: page 45
Note: Refer to page 69 for LED Characteristics.
○: Connectable

Dimensions

(Unit: mm)

A **FLV-FX100□**

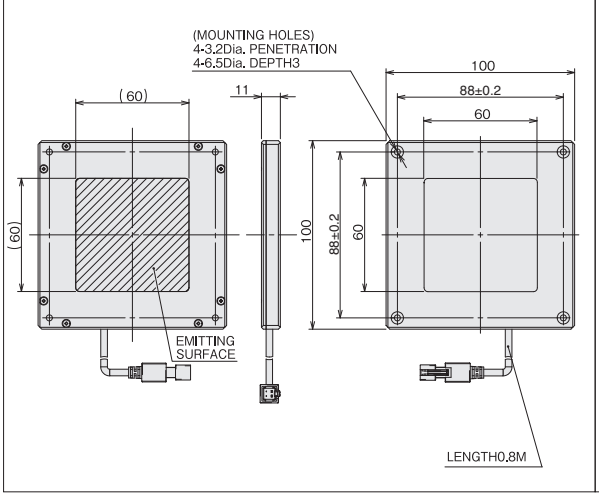

B **FLV-FX143□**

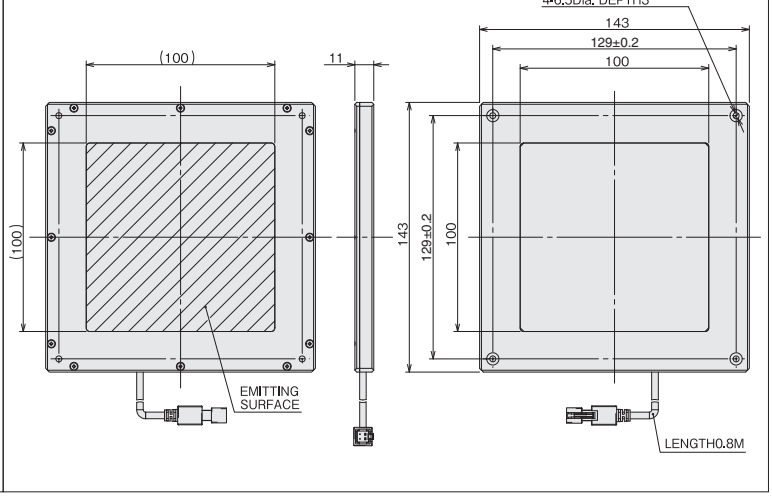

Dome Light

FLV-DD Series

Uniform Illumination from All Directions
This series produces shadowless images of the entire workpiece.

Product Features

- Achieves uniform illumination by reflecting light from a ring-shaped light source through a highly reflective, diffusion dome.

Cross-sectional Diagram

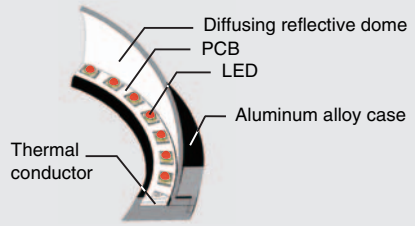

Illustration of Illumination

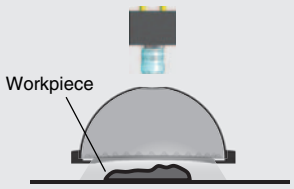

* This figure is a conceptual illustration and may vary from the actual structure.

Applications

- Detection of characters and marks on curved or uneven surfaces
- Detection of highly reflective surfaces, such as metal or glass
- Shape measurements of curved or uneven workpieces

Inspection of Date Characters on Drink Cans

Detection of Characters on Cell Phones

Detection of Cracks on Spring Surfaces

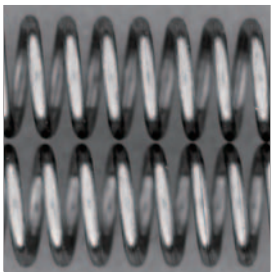

Inspection of IC Pins

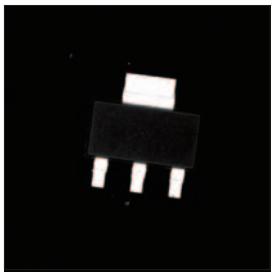

Scratch Detection on Metal Bars

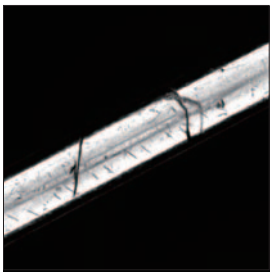

Ordering Information

Model	Color	Power consumption (W)	Dimensions				Controller *			Weight (g)
			Lighting Area Dimension (mm)	Outside Dimension (mm)	Height (mm)	Drawing	FLV-TCC□	FLV-ATC□	3Z4S-LT IDGB□	
FLV-DD70W	WHITE	2.3	45 dia.	70 dia.	31.74	A	○	○	○	130
FLV-DD70R	RED	1.4					○	○	○	
FLV-DD70B	BLUE	2.3					○	○	○	
FLV-DD100W	WHITE	17.9	65.6 dia.	114 dia.	56.28	B	×	○	○	210
FLV-DD100R	RED	11.9					○	○	○	
FLV-DD100B	BLUE	17.9					×	○	○	
FLV-DD150W	WHITE	17.9	116 dia.	175 dia.	83.21	C	×	○	○	490
FLV-DD150R	RED	11.9					○	○	○	
FLV-DD150B	BLUE	17.9					×	○	○	

* For the connectable Lighting Controller models and conditions, refer to the Specifications pages of each Lighting Controller.
FLV-TCC□: page 32 FLV-ATC□: page 38 3Z4S-LT IDGB□: page 45
Note: Refer to page 69 for LED Characteristics.
○: Connectable ×: Not connectable

Dimensions

(Unit: mm)

A FLV-DD70□

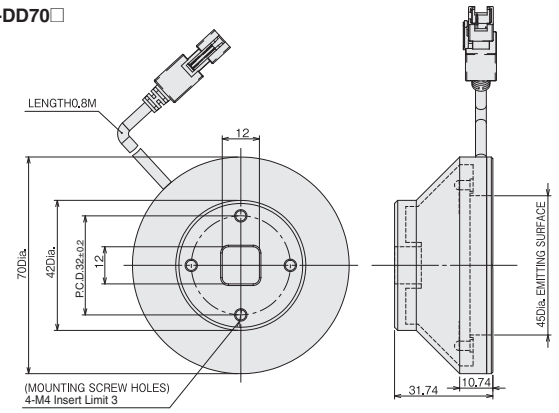

Tightening torque: 1.2 N · m

B FLV-DD100□

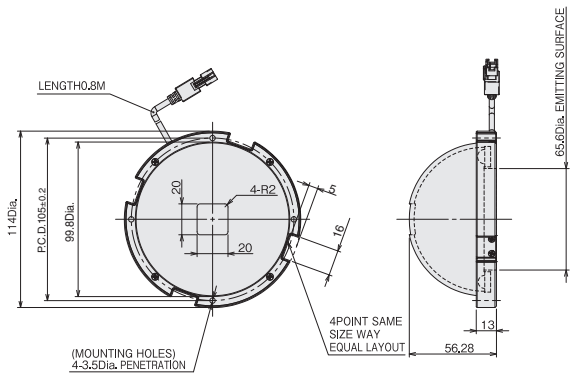

C FLV-DD150□

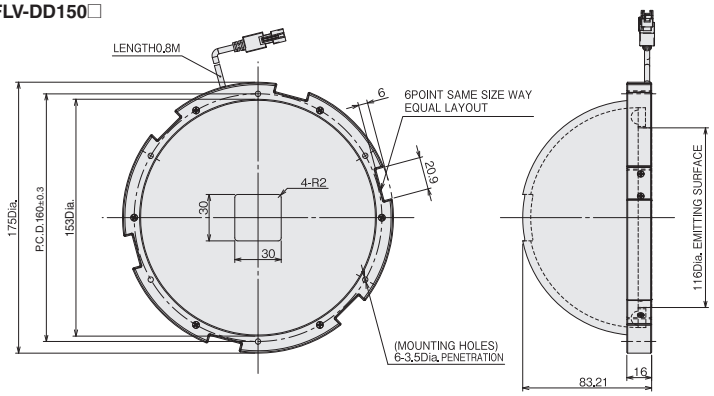

Line Light

FLV-LN Series

Exceptionally Bright, Highly Uniform Line Lighting
This series is ideal for high-speed processing with line cameras.

Product Features

- Extremely high brightness
- Achieves highly effective line illumination with a condenser lens.

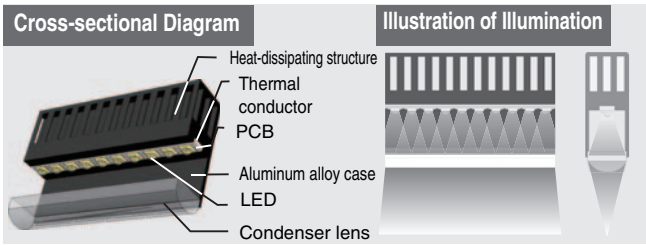

* This figure is a conceptual illustration and may vary from the actual structure.

Applications

- Printing inspections
- Sheet inspections
- Detection of film and glass surface damage and internal impurities

Ordering Information

Model	Color	Power consumption (W)	Dimensions				Controller *			Weight (g)
			Lighting Area Dimension (mm)	Outside Dimension (mm)	Height (mm)	Drawing	FLV-TCC□	FLV-ATC□	3Z4S-LT IDGB□	
FLV-LN82W	WHITE	9.2	62×16	82×83.5	50	A	×	○	×	640
FLV-LN82B	BLUE	9.2					×	○	×	
FLV-LN122R	RED	10.4	102×16	122× 83.5	50	E	×	○	×	800
FLV-LN142W	WHITE	18.4	122×16	142×83.5	50	B	×	○	×	890
FLV-LN142B	BLUE	18.4					×	○	×	
FLV-LN222R	RED	20.7	202×16	222×83.5	50	F	×	○	×	1320
FLV-LN322W	WHITE	45.9	302×16	322×83.5	50	C	×	○	×	1950
FLV-LN322	BLUE	45.9					×	○	×	
FLV-LN322R	RED	31.1	302×16	322×83.5	50	G	×	○	×	
FLV-LN442W	WHITE	64.3	442×16	442×83.5	50	D	×	○	×	2450
FLV-LN442B	BLUE	64.3					×	○	×	
FLV-LN422R	RED	41.4	402×16	422×83.5	50	H	×	○	×	2400

* For the connectable Lighting Controller models and conditions, refer to the Specifications pages of each Lighting Controller.
FLV-TCC□: page 32 FLV-ATC□: page 38 3Z4S-LT IDGB□: page 45
Note: Refer to page 69 for LED Characteristics.
○: Connectable ×: Not connectable

Dimensions

(Unit: mm)

A FLV-LN82W/B

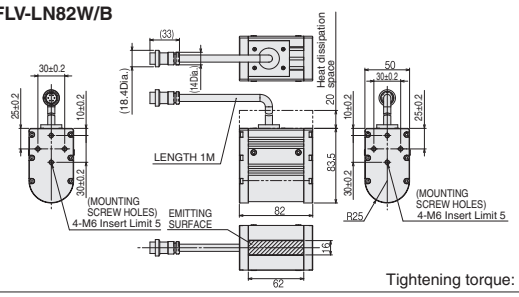

Tightening torque: 4.30 N · m

B FLV-LN142W/B

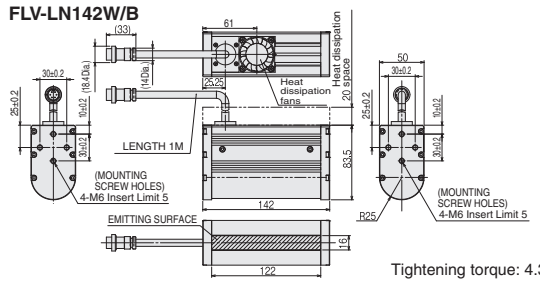

Tightening torque: 4.30 N · m

C FLV-LN322W/B

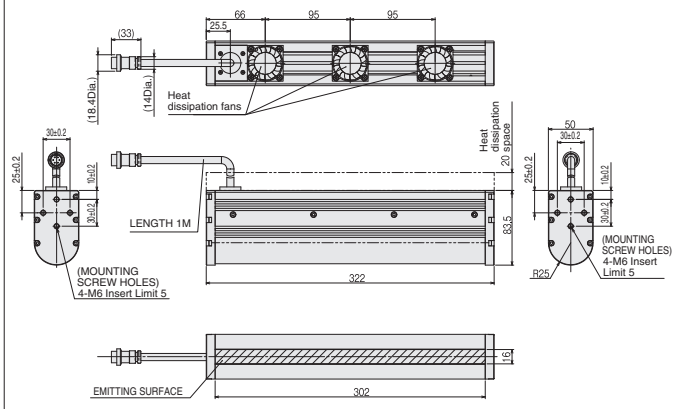

Tightening torque: 4.30 N · m

D FLV-LN442W/B

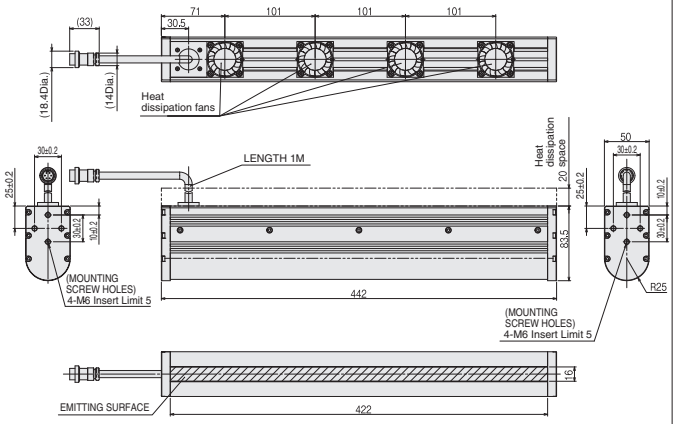

Tightening torque: 4.30 N · m

E FLV-LN122R

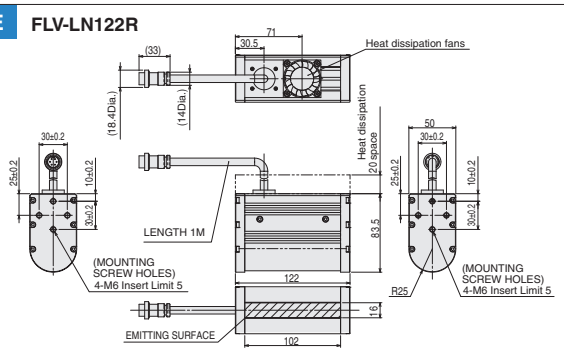

Tightening torque: 4.30 N · m

F FLV-LN222R

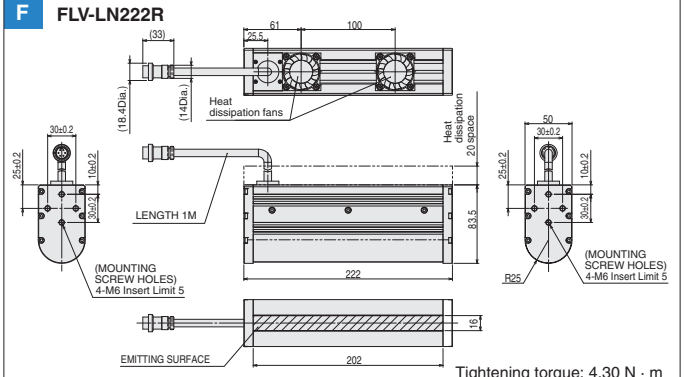

Tightening torque: 4.30 N · m

G FLV-LN322R

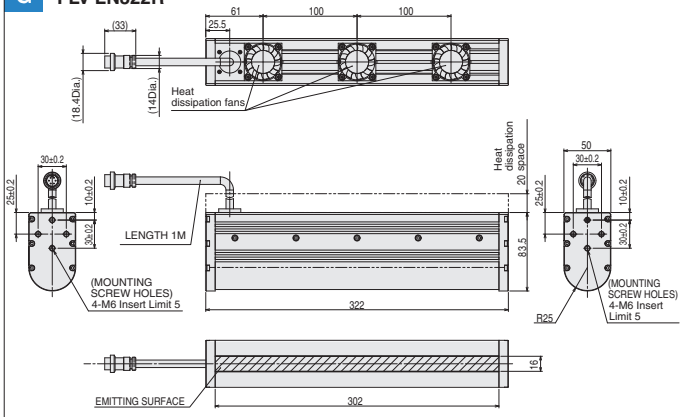

Tightening torque: 4.30 N · m

H FLV-LN422R

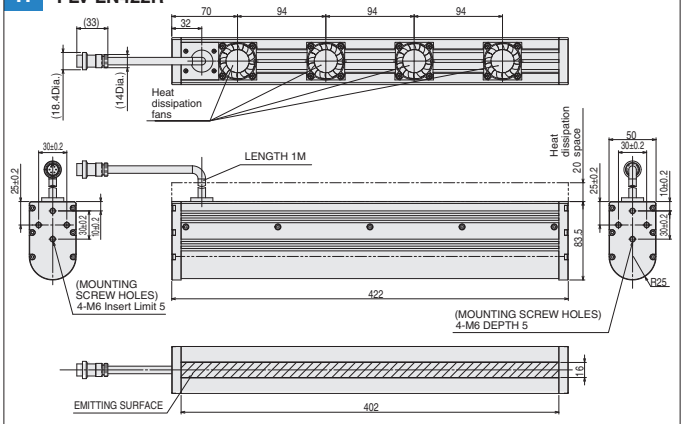

Tightening torque: 4.30 N · m

Camera-mount Lighting Controller for FLV Series

FLV-TCC Series

Compact Lighting Controller
Mounts directly onto the FH/FZ OMRON Cameras
Multistage Control of Lighting on Up to Four Lights can be connected.

Product Features

- Saves space with its compact design.
- No need for space in control panels for expansion.
- Maintains Lighting intensity even when located at long distances.
- Light intensity and luminance control are set through the Vision System.

● Simple wiring and space saving

Wiring from the control panel to remote Cameras and Lights is simplified.
The more Cameras and Lights are connected to the Vision System Controller, the more effective in simplifying wiring and saving space.

Standard Lighting System

· Complicated wiring from the control panel to the Lights and Camera is required.
· Space to install the Power Supply for Lights in the control panel is required.

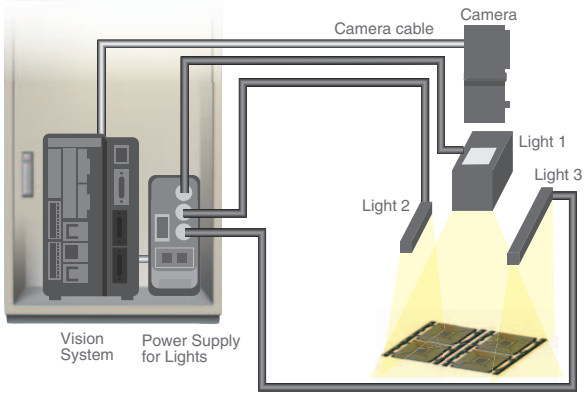

Camera cable + lighting cables are wired from control panel

FLV-TCC Series

· Power supplied from the Camera eliminates the need for complicated wiring from the control panel to the Lights.
· The compact design that enables mounting onto the Camera saves space in the control panel.

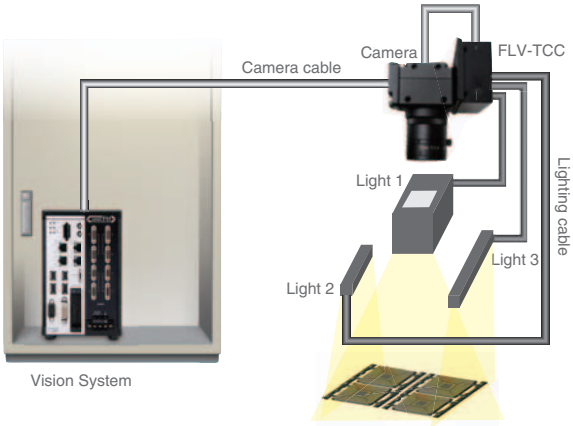

Only the camera cable is connected from control panel

●Easy control setting

Light intensity and luminance control can be set from the flow menu of the Vision System Controller. No need of ladder programming to create light sequence or communications settings.

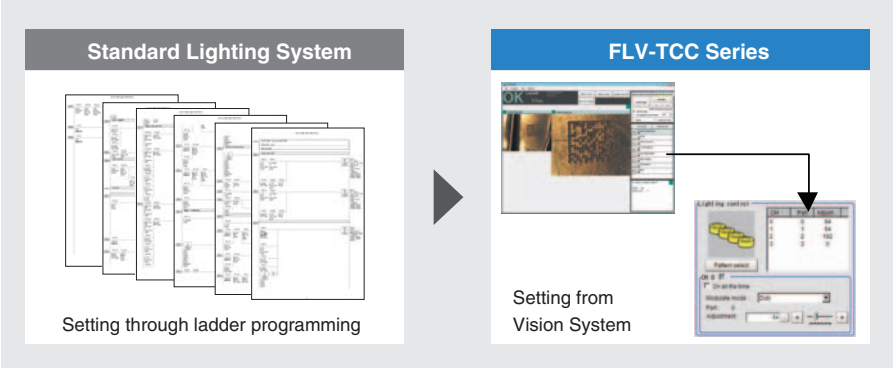

●Maintaining light intensity even with long wiring distances

Even if the Vision System Controller and Light are separated by a long distance, the light intensity is maintained due to power being supplied through the Camera. This means that it is not required to increase light intensity and power consumption for high-speed production lines.

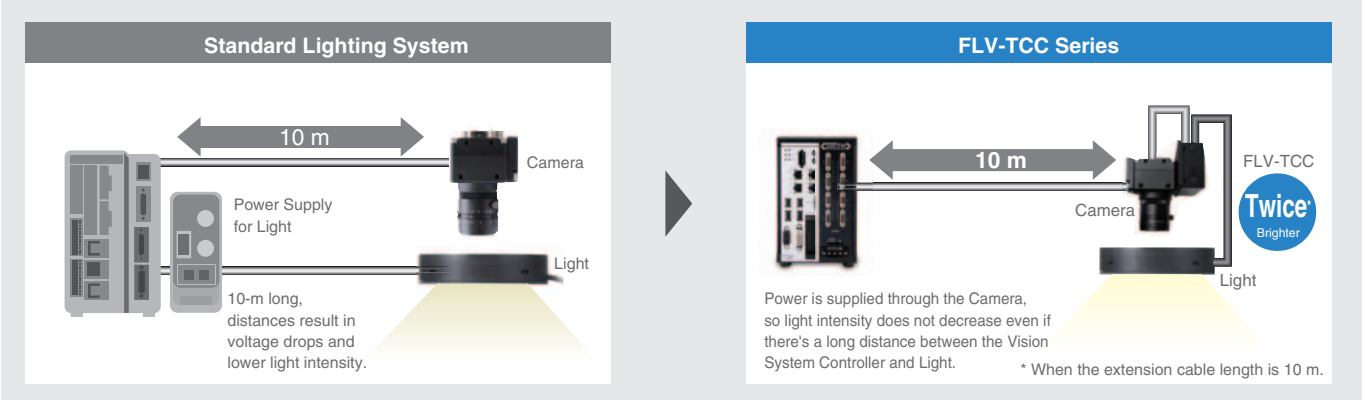

●Connecting Spot Light

The new FLV-TCC□EP can be connected with a Spot Light, and the hybrid type FLV-TCC□HB can be connected with up to two Standard Lights and a Spot Light. Applications such as alignment and cosmetic inspection of small electronic parts, e.g. connectors and IC's, require these kind of Lighting Controllers using Spot Lights.

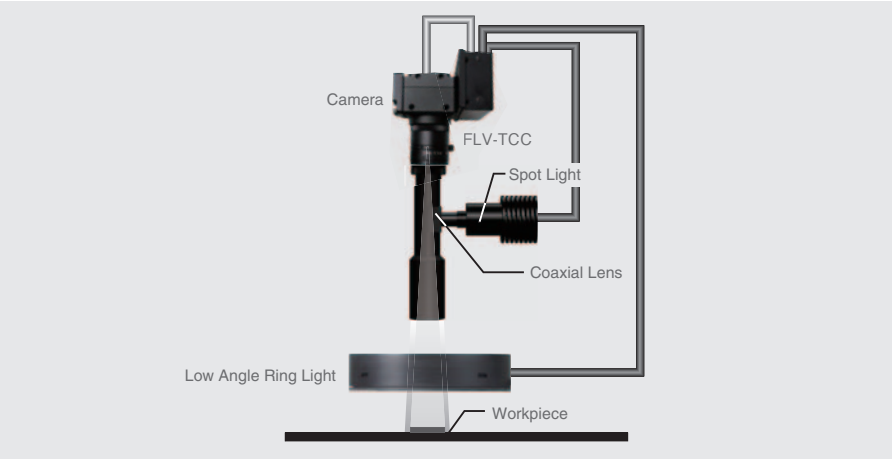

Ordering Information

Model	Number of Channels	Applicable Light *5			Power Supply Voltage	Power of Connected Light	Luminance Control Method
		Standard Light FLV Series*1	Spot Light FLV-EP Series	Line Light FLV-LN Series			
FLV-TCC4	4 standard lights	○	×	×	24 VDC *2	15 W max.*3	Digital *4
FLV-TCC1	1 standard light	○	×	×			
FLV-TCC3HB	1 Spot Light and 2 standard lights	○	○	×			
FLV-TCC1EP	1 Spot Light	×	○	×	—	Any FLV-EP-series Spot Light can be connected	

*1. Standard light means all FLV-series Lights excluding the FLV-EP-series Spot Lights and the FLV-LN-series Line Lights.
*2. If the total power consumption of Lights is 7.5 W or less, an external power supply is not required because the power is supplied from the Camera.
*3. Refer to the Specifications on page 34 for the details of "power for connectable lighting".
*4. Intensity is controlled through the settings of the Vision System Controller.
*5. ○: Connectable ×: Not connectable

Camera-mount Lighting Controller for FLV Series FLV-TCC Series

Specifications

Item / Model	FLV-TCC4	FLV-TCC1	FLV-TCC3HB	FLV-TCC1EP
Number of channels	4 standard lights	1 standard light	1 Spot Light, 2 standard lights	1 Spot Light
Applicable light *1	FLV series (excluding FLV-EP series and FLV-LN series)		FLV series (excluding FLV-LN series)	FLV-EP series
Applicable camera *2	FH-S series, FZ-S series			
Applicable vision system controller	FH series, FZ5 series			
Input voltage	Supplied from applicable camera (12 V) or external power supply (24 V) *3			Supplied from applicable camera (12 V)
External power supply voltage	24 VDC 10% (including ripple)			—
Current consumption	1.5A max.			1.0A max.
Recommended power supply	S8VS-06024 (manufactured by OMRON, 24 VDC, 2.5 A, 60 W)			—
Power of connected light — **12 VDC for camera supply** — **Continuous lighting**	4ch total 7.5 W max.	7.5 W max.	0ch connection: 1,2ch total 5.5 W max. 0ch non-connection: 1,2ch total 7.5 W max.	All FLV-EP series can be connected.
Power of connected light — **12 VDC for camera supply** — **Trigger lighting** — **Simultaneous lighting**	4ch total 7.5 W max.	7.5 W max.	0ch connection: 1,2ch total 5.5 W max. 0ch non-connection: 1,2ch total 7.5 W max.	
Power of connected light — **12 VDC for camera supply** — **Trigger lighting** — **Individual lighting**	7.5 W max. for 1ch		7.5 W max. for 1ch	
Power of connected light — **24 VDC for external supply** — **Continuous lighting**	4ch total 7.5 W max.	7.5 W max.	0ch connection: 1,2ch total 5.5 W max. 0ch non-connection: 1,2ch total 7.5 W max.	—
Power of connected light — **24 VDC for external supply** — **Trigger lighting** — **Simultaneous lighting**	4ch total 15 W max.	15 W max.	0ch connection: 1,2ch total 14 W max. 0ch non-connection: 1,2ch total 15 W max.	
Power of connected light — **24 VDC for external supply** — **Trigger lighting** — **Individual lighting**	15 W max. for 1ch		15 W max. for 1ch	
Drive method	Constant voltage method		0ch Constant current method 1ch/2ch: Constant voltage method	Constant current method
Lighting method	Trigger lighting, Continuous lighting			
Luminance control method	Duty light adjustment or voltage light adjustment Duty light adjustment: PWM frequency of 100 kHz, light adjustment of 255 levels Voltage light adjustment: Light adjustment of 255 levels (all are configured with vision system controller)		0ch Duty light adjustment or current light adjustment 1ch/2ch Duty light adjustment or voltage light adjustment Duty light adjustment: PWM frequency of 100 kHz, light adjustment of 255 levels current light adjustment/ Voltage light adjustment: Light adjustment of 255 levels (all are configured with vision system controller)	Duty light adjustment or current light adjustment Duty light adjustment: PWM frequency of 100 kHz, light adjustment of 255 levels current light adjustment: Light adjustment of 255 levels (all are configured with vision system controller)
Trigger lighting	Lighting in synchronization with trigger input timing from the controller.			
Trigger lighting delay time	Ton: 30µs max.			
Lighting duration setting	Auto setting in accordance with shutter speed.			
External interface	Camera connection cable (directly connected with the main unit)			
Insulation resistance	0.5 MΩ (100VDC)			
Ambient temperature	Operating: 0 to +50°C, Storage: -15 to +60°C (with no icing or condensation)			
Ambient humidity	Operating and storage: 35% to 85% (with no condensation)			
Degree of protection	IP20 (IEC60529)			
Vibration resistance (destructive)	10 to 150 Hz, (0.7mm double amplitude) 80 min each in X, Y, and Z directions			
Shock resistance (destructive)	150 m/s² 3 times each in 6 directions(up/down, left/right, forward/backward)			
Materials	Case,Camera mount plate: Aluminum, Cable: FPVC			
Weight	Approx. 130g (including the camera mount plate)	Approx. 120g (including the camera mount plate)	Approx. 130g (including the camera mount plate)	Approx. 120g (including the camera mount plate)
Accessories	Instruction sheet, Lighting connection table, Camera Mount plate, Mounting screws (M2 set screw x 4, M2 flat head screw x 4, M4 flat head screw x 4)			
Applicable standards	EN61326-1 *4, KC			

*1. Check the lighting connection table of accessory.
*2. When mounting on the FH-S□12, use the FH-SM12-XLC (sold separately).
*3. When supplying the power to this product from an external input power supply (24V), make sure to turn ON the power to this product first or at the same time with the vision system controller. If you reverse this order, this product will not recognize the 24V external input, so lighting greater than 7.5W will not be possible.
*4. Electromagnetic environment: Industrial electromagnetic environment (EN/IEC 61326-1 Table 2)
Also, the following condition is applied to the immunity test of this product.
There are case that Lighting brightness fluctuate Max 10%.

FLV Light Connection Table

Lighting controllers that can be connected to each light are shown below.

◎: Connectable, continuous lighting possible ○: Connectable, only trigger lighting possible ×: Not connectable
The following table shows if you can connect one light to each lighting controller.
When connecting lights to multiple channels, make sure that the total power consumption of the connected lights is within the specification of the lighting controller.

Direct Ring Light

Model	Power consumption	FLV-TCC4□ FLV-TCC1□	FLV-TCC3HB□ *1	
			0ch non-connection	0ch connection
FLV-DR3220W	1.4W	◎	◎	◎
FLV-DR3220R	1.3W	◎	◎	◎
FLV-DR3220B	1.4W	◎	◎	◎
FLV-DR4415W	2.7W	◎	◎	◎
FLV-DR4415R	1.7W	◎	◎	◎
FLV-DR4415B	2.7W	◎	◎	◎
FLV-DR5030W	3.1W	◎	◎	◎
FLV-DR5030R	1.8W	◎	◎	◎
FLV-DR5030B	3.1W	◎	◎	◎
FLV-DR5030IR	1.3W	◎	◎	◎
FLV-DR6030UV	3.2W	◎	◎	◎
FLV-DR6615W	5.0W	◎	◎	◎
FLV-DR6615R	3.9W	◎	◎	◎
FLV-DR6615B	5.0W	◎	◎	◎
FLV-DR7000W	5.0W	◎	◎	◎
FLV-DR7000R	3.7W	◎	◎	◎
FLV-DR7000B	5.0W	◎	◎	◎
FLV-DR7030W	5.0W	◎	◎	◎
FLV-DR7030R	3.7W	◎	◎	◎
FLV-DR7030B	5.0W	◎	◎	◎
FLV-DR7030IR	2.6W	◎	◎	◎
FLV-DR7530UV	5.4W	◎	◎	◎
FLV-DR9000W	8.8W	○	○	○
FLV-DR9000R	7.0W	◎	◎	○
FLV-DR9000B	8.8W	○	○	○
FLV-DR9030W	8.1W	○	○	○
FLV-DR9030R	6.6W	◎	◎	○
FLV-DR9030B	8.1W	○	◎	○
FLV-DR9030IR	4.3W	◎	◎	◎
FLV-DR9030UV	6.8W	◎	◎	○
FLV-DR9215W	7.4W	◎	◎	○
FLV-DR9215R	5.4W	◎	◎	◎
FLV-DR9215B	7.4W	◎	◎	○
FLV-DR12030W	11.9W	○	○	○
FLV-DR12030R	9.8W	○	○	○
FLV-DR12030B	11.9W	○	○	○

*1. 0ch is only for Spot Light.

Low Angle Ring Light

Model	Power consumption	FLV-TCC4□ FLV-TCC1□	FLV-TCC3HB□	
			0ch non-connection	0ch connection
FLV-DL5890W	1.9W	◎	◎	◎
FLV-DL5890R	1.3W	◎	◎	◎
FLV-DL5890B	1.9W	◎	◎	◎
FLV-DL7260W	5.7W	◎	◎	○
FLV-DL7260R	3.9W	◎	◎	◎
FLV-DL7260B	5.7W	◎	◎	○
FLV-DL9090W	2.8W	◎	◎	◎
FLV-DL9090R	1.8W	◎	◎	◎
FLV-DL9090B	2.8W	◎	◎	◎
FLV-DL12060W	12.7W	○	○	○
FLV-DL12060R	10.5W	○	○	○
FLV-DL12060B	12.7W	○	○	○
FLV-DL15060W	13.6W	○	○	○
FLV-DL15060R	11.2W	○	○	○
FLV-DL15060B	13.6W	○	○	○

Bar Light

Model	Power consumption	FLV-TCC4□ FLV-TCC1□	FLV-TCC3HB□	
			0ch non-connection	0ch connection
FLV-BR6022W	1.4W	◎	◎	◎
FLV-BR6022R	1.3W	◎	◎	◎
FLV-BR6022B	1.4W	◎	◎	◎
FLV-BR6022IR	0.9W	◎	◎	◎
FLV-BR6424UV	1.8W	◎	◎	◎
FLV-BR8532W	3.5W	◎	◎	◎
FLV-BR8532R	3.1W	◎	◎	◎
FLV-BR8532B	3.5W	◎	◎	◎
FLV-BR11222W	4.2W	◎	◎	◎
FLV-BR11222R	2.6W	◎	◎	◎
FLV-BR11222B	4.2W	◎	◎	◎
FLV-BR11222IR	1.8W	◎	◎	◎
FLV-BR11624UV	3.6W	◎	◎	◎
FLV-BR14030W	6.1W	◎	◎	○
FLV-BR14030R	4.8W	◎	◎	◎
FLV-BR14030B	6.1W	◎	◎	○
FLV-BR15020W	5.5W	◎	◎	◎
FLV-BR15020R	3.1W	◎	◎	◎
FLV-BR15020B	5.5W	◎	◎	◎
FLV-BR21222W	8.7W	○	○	○
FLV-BR21222R	5.0W	◎	◎	◎
FLV-BR21222B	8.7W	○	○	○
FLV-BR21230W	8.8W	○	○	○
FLV-BR21230R	7.0W	◎	◎	○
FLV-BR21230B	8.8W	○	○	○
FLV-BR21230IR	6.1W	◎	◎	○
FLV-BR21230UV	7.8W	○	○	○
FLV-BR38037W	15.9W	×	×	×
FLV-BR38037R	11.3W	○	○	○
FLV-BR38037B	15.9W	×	×	×
FLV-BR48031W	21.9W	×	×	×
FLV-BR48031R	18.0W	×	×	×
FLV-BR48031B	21.9W	×	×	×

Coaxial Light

Model	Power consumption	FLV-TCC4□ FLV-TCC1□	FLV-TCC3HB□	
			0ch non-connection	0ch connection
FLV-CL30W	2.4W	◎	◎	◎
FLV-CL30R	1.4W	◎	◎	◎
FLV-CL30B	2.4W	◎	◎	◎
FLV-CL40W	3.9W	◎	◎	◎
FLV-CL40R	2.3W	◎	◎	◎
FLV-CL40B	3.9W	◎	◎	◎
FLV-CL60W	10.4W	○	○	○
FLV-CL60R	5.7W	◎	◎	○
FLV-CL60B	10.4W	○	○	○
FLV-CL60IR	3.9W	◎	◎	◎
FLV-CL60UV	3.0W	◎	◎	◎
FLV-CL80W	10.8W	○	○	○
FLV-CL80R	7.2W	◎	◎	○
FLV-CL80B	10.8W	○	○	○
FLV-CL100W	22.7W	×	×	×
FLV-CL100R	15.2W	×	×	×
FLV-CL100B	22.7W	×	×	×

Camera-mount Lighting Controller for FLV Series FLV-TCC Series

Shadowless Light

Model	Power consumption	FLV-TCC4□ FLV-TCC1□	FLV-TCC3HB□	
			0ch non-connection	0ch connection
FLV-FR114W	3.9W	◎	◎	◎
FLV-FR114R	3.1W	◎	◎	◎
FLV-FR114B	3.9W	◎	◎	◎
FLV-FR150W	6.1W	◎	◎	○
FLV-FR150R	3.5W	◎	◎	◎
FLV-FR150B	6.1W	◎	◎	○
FLV-FP130W	8.1W	○	○	○
FLV-FP130R	5.8W	◎	◎	○
FLV-FP130B	8.1W	○	○	○
FLV-FS74W	5.2W	◎	◎	◎
FLV-FS74R	3.5W	◎	◎	◎
FLV-FS74B	5.2W	◎	◎	◎
FLV-FQ48W	2.0W	◎	◎	◎
FLV-FQ48R	1.2W	◎	◎	◎
FLV-FQ48B	2.0W	◎	◎	◎

Direct Back Light

Model	Power consumption	FLV-TCC4□ FLV-TCC1□	FLV-TCC3HB□	
			0ch non-connection	0ch connection
FLV-DB3729W	0.9W	◎	◎	◎
FLV-DB3729R	0.9W	◎	◎	◎
FLV-DB3729B	0.9W	◎	◎	◎
FLV-DB10181W	8.1W	○	○	○
FLV-DB10181R	4.7W	◎	◎	◎
FLV-DB10181B	8.1W	○	○	○
FLV-DB130130W	13.0W	○	○	○
FLV-DB130130R	11.5W	○	○	○
FLV-DB130130B	13.0W	○	○	○
FLV-DB212152W	29.4W	×	×	×
FLV-DB212152R	20.2W	×	×	×
FLV-DB212152B	29.4W	×	×	×

Edge Type Light

Model	Power consumption	FLV-TCC4□ FLV-TCC1□	FLV-TCC3HB□	
			0ch non-connection	0ch connection
FLV-FB5050W	1.9W	◎	◎	◎
FLV-FB5050R	1.0W	◎	◎	◎
FLV-FB5050B	1.9W	◎	◎	◎
FLV-FB7070W	1.9W	◎	◎	◎
FLV-FB7070R	1.4W	◎	◎	◎
FLV-FB7070B	1.9W	◎	◎	◎
FLV-FB9090W	3.7W	◎	◎	◎
FLV-FB9090R	1.9W	◎	◎	◎
FLV-FB9090B	3.7W	◎	◎	◎
FLV-FB130130W	5.5W	◎	◎	◎
FLV-FB130130R	3.7W	◎	◎	◎
FLV-FB130130B	5.5W	◎	◎	◎
FLV-FB200200W	7.3W	◎	◎	○
FLV-FB200200R	5.5W	◎	◎	◎
FLV-FB200200B	7.3W	◎	◎	○

Edge Type Coaxial Light

Model	Power consumption	FLV-TCC4□ FLV-TCC1□	FLV-TCC3HB□	
			0ch non-connection	0ch connection
FLV-FX100W	3.7W	◎	◎	◎
FLV-FX100R	1.9W	◎	◎	◎
FLV-FX100B	3.7W	◎	◎	◎
FLV-FX143W	5.5W	◎	◎	◎
FLV-FX143R	3.7W	◎	◎	◎
FLV-FX143B	5.5W	◎	◎	◎

Dome Light

Model	Power consumption	FLV-TCC4□ FLV-TCC1□	FLV-TCC3HB□	
			0ch non-connection	0ch connection
FLV-DD70W	2.3W	◎	◎	◎
FLV-DD70R	1.4W	◎	◎	◎
FLV-DD70B	2.3W	◎	◎	◎
FLV-DD100W	17.9W	×	×	×
FLV-DD100R	11.9W	○	○	○
FLV-DD100B	17.9W	×	×	×
FLV-DD150W	17.9W	×	×	×
FLV-DD150R	11.9W	○	○	○
FLV-DD150B	17.9W	×	×	×

Spot Light

Model	Power consumption	FLV-TCC3HB□ FLV-TCC1EP□
FLV-EP0803W	1.6W	◎
FLV-EP0803R	1.1W	◎
FLV-EP0803B	1.6W	◎
FLV-EP50W	1.6W	◎
FLV-EP50R	1.1W	◎

Line Light

Model	Power consumption
FLV-LN82W	9.2W
FLV-LN142W	18.4W
FLV-LN322W	45.9W
FLV-LN442W	64.3W
FLV-LN122R	10.4W
FLV-LN222R	20.7W
FLV-LN322R	31.1W
FLV-LN422R	41.4W
FLV-LN82B	9.2W
FLV-LN142B	18.4W
FLV-LN322B	45.9W
FLV-LN442B	64.3W

Part Names and Functions

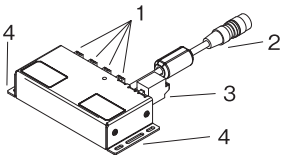

No.	Name	Description
1	Lighting connecting connector	Connects to the LED lighting.
2	Camera connecting cable	Connects to the extension connector of the camera.
3	24 V external power supply input terminal block *	Connect a 24-VDC power supply if the total power consumption of the Lightings exceeds 7.5 W.
4	Mounting hole for fixing screw	Holes to mount the screws to secure the Lighting Controller to a mounting plate or device.

* To wire the terminal block, connect a applicable cord (AWG12-26 with a 10 mm margin for work).

Mounting the Controller to the Camera

The Lighting Controller can be mounted to the Camera using the provided camera mount plate. Mounting directions are: (1) Top/Bottom mount, (2) Right side mount, (3) Left side mount.

(1) Top/Bottom mount

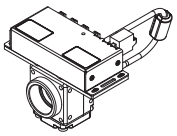

(2) Right side mount

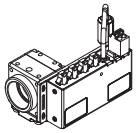

(3) Left side mount

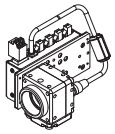

Dimensions

(Unit: mm)

●Lighting Controller

FLV-TCC4

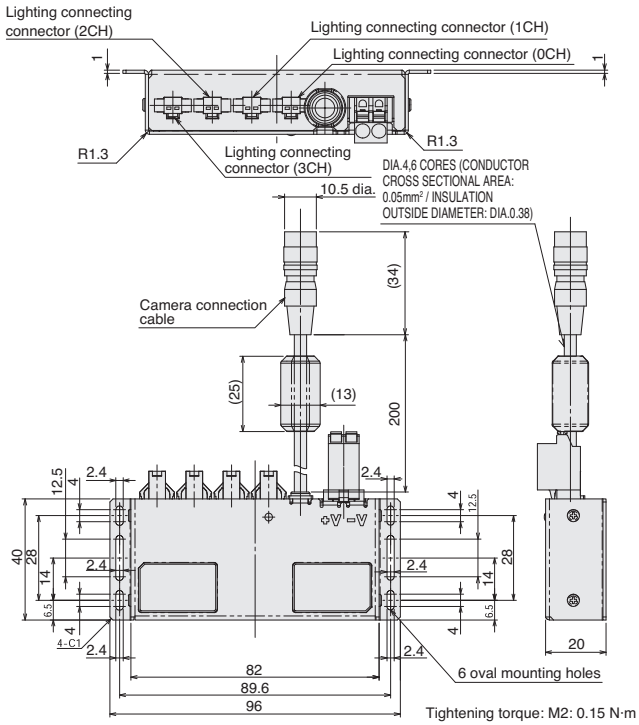

Tightening torque: M2: 0.15 N·m

FLV-TCC1

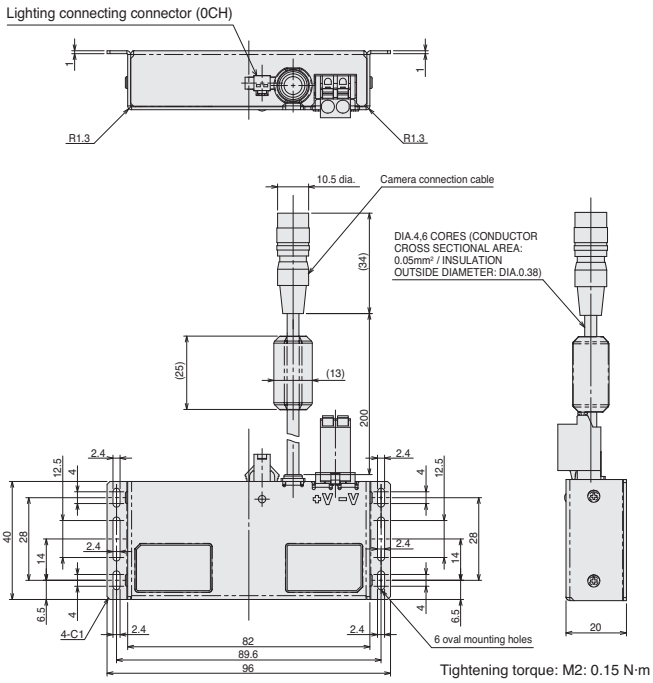

Tightening torque: M2: 0.15 N·m

FLV-TCC3HB

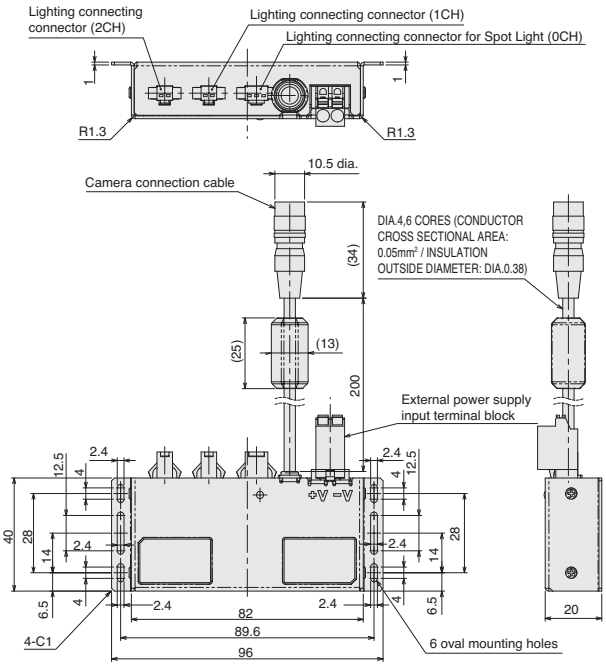

Tightening torque: M2: 0.15 N·m

FLV-TCC1EP

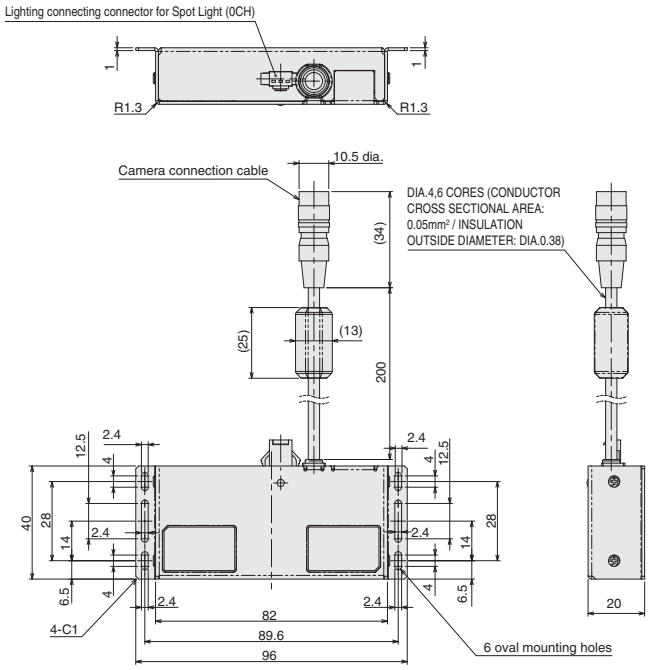

Tightening torque: M2: 0.15 N·m

●Camera mount plate (provided)

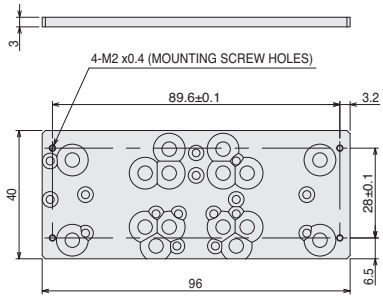

Analog Lighting Controller for FLV Series

FLV-ATC Series

Stationary Lighting Controller.

Product Features

- Stationary type suitable for separate installation when no space near the Camera.
- Light emission trigger can be input directly even without Vision Sensor.

Ordering Information

Applicable light	Model	Number of channels	Power supply voltage	Power of connected light	Luminance control method
For standard light *1	**FLV-ATC21024 *2**	2	100 to 240 VAC, 50/60 Hz	40 W max.	Analog
	FLV-ATC41024 *2	4			
For spot light	**FLV-ATC10405 *2**	1		3 W max.	
	FLV-ATC40405 *2	4		12 W max.	
For line light	**FLV-ATC26024-100V *2**	2	100 to 120 VAC, 50/60 Hz	240 W max.	
	FLV-ATC26024-200V	2	200 to 240 VAC, 50/60 Hz		

*1. Standard Light means all FLV-series Lights excluding the FLV-EP-series Spot Lights and the FLV-LN-series Line Lights.
*2. For AC power cords: An A-type plug is standard. C-type and O-type plugs are also available. (Add "-C" or "-O" to the end of the model number.)

Plug type	A	C	O
Rated voltage	125 V	240 V	240 V
Standard	PSE	CEE	CCC

AC Power Cords with A-type Plugs

⚠ WARNING

The cable included in this package can be applied only to 100 VAC commercial power in Japan. You can not use it in the country outside Japan.
Please never use it on the voltage beyond 100 VAC.
It becomes a cause of ignition, generation of heat, and failure.

Lighting Controller for Standard Light FLV-ATC21024/-ATC41024

Part Names and Functions

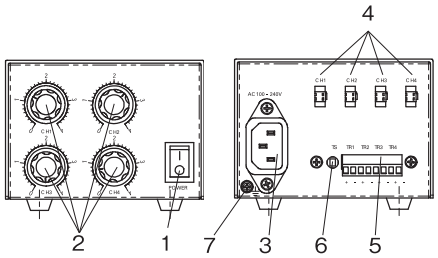

No.	Name	Description
1	Main power supply	Starts up the Controller when it is turned ON.
2	Lighting adjustment volume	Rotating the volume clockwise increases the emission intensity or counterclockwise decreases it.
3	AC power supply input connector	A terminal to supply AC power. Connect the provided AC input cable.
4	Lighting connector	Connects an LED light.
5	Trigger input terminal block	A terminal block for lighting illumination trigger input from outside to each lighting.
6	Lighting mode switching button	Lighting mode switch button is ON (The button is pushed.): Short-circuiting (+) and (-) of TR1 to TR4 respectively makes the trigger input status ON, turning the light ON. Releasing (+) and (-) makes the status OFF, turning the light OFF.
		Lighting mode switch button is OFF (The button is not pushed.): Short-circuit (+) and (-) of TR1 to TR4 respectively makes the trigger input status OFF, turning the light OFF. Releasing (+) and (-) makes the status ON, turning the light ON.
7	Frame ground terminal	A terminal for frame ground. Connect the ground line.

Specifications

Item / Model	FLV-ATC21024-□ *1	FLV-ATC41024-□ *1
Number of channels	2	4
Applicable light	FLV series (FLV-EP series and FLV-LN series are excluded.)	
Power supply voltage *2	100 to 240 VAC, 50/60 Hz	
Current consumption	1 A max.	
Power of connected light	2ch total 40 W max. 30 W max. for 1ch	4ch total 40 W max. 30 W max. for 1ch
Drive method	Constant voltage method	
Lighting method	Trigger lighting, Continuous lighting	
Luminance control method	Voltage light adjustment: 14.0 to 24.0 V	
Trigger lighting	Lighting in synchronization with input from the trigger input terminal	
Trigger lighting delay time	T_on: 100 µs max.	
External interface	Trigger input terminal block	
Dielectric strength	1500 VAC 50/60 Hz 1 min	
Insulation resistance	20 MΩ (500 VDC)	
Ambient temperature	Operating: 0 to 50°C, Storage: -15 to 60°C (with no icing or condensation)	
Ambient humidity	Operating/storage: 35% to 85% (with no condensation)	
Degree of protection	IP20 (IEC60529)	
Vibration resistance (destructive)	10 to 150 Hz, (0.2 mm double amplitude) 80 min each in X, Y, and Z directions	
Shock resistance (destructive)	150 m/s² 3 times each in 6 directions (up/down, left/right, forward/backward)	
Materials	Case: Aluminum	
Weight	Approx. 800 g	
Accessories	Instruction sheet, AC input cable *1	
Applicable standards	EN61326-1 *3	

*1. The suffixed symbol of the model name means the plug type of the accessory cable. A model name with no suffix means type A.
*2. This product is the exclusive use for apparatus inclusion in the industrial machine field.
This product cannot be used for the connection to electric power equipment, such as a common residence, store, and small establishment, because of nonconformity with to Electrical Appliance and Material Safety Law (PSE).
*3. Electromagnetic environment: Industrial electromagnetic environment (EN/IEC 61326-1 Table 2)
Also, the following condition is applied to the immunity test of this product.
There are case that Lighting brightness fluctuate Max 10%.

Analog Lighting Controller for FLV Series FLV-ATC Series

Connecting to External Trigger Input Terminal Block

- Connection of this terminal block is not required if lighting illumination trigger input from outside is not used.

<Connection of trigger input terminal block>

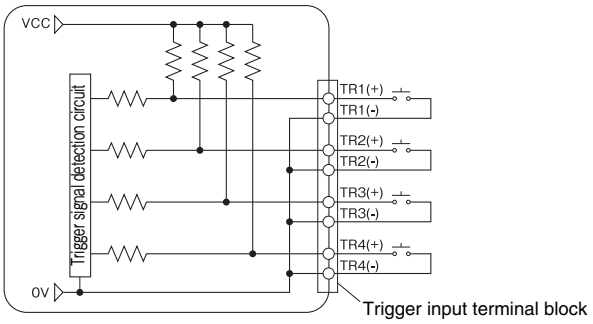

* Current flowing through the short circuit is less than 2 mA.

●FLV-ATC21024-□

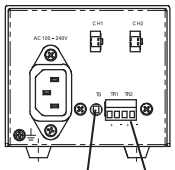

●FLV-ATC41024-□

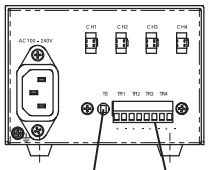

Lighting mode switch button

Trigger input terminal block CH1 to CH2

Lighting mode switch button

Trigger input terminal block CH1 to CH4

Lighting mode switch button is ON (The button is pushed.)

Short-circuiting (+) and (-) of TR1 to TR4 respectively makes the trigger input status ON, turning the light ON. Releasing (+) and (-) makes the status OFF, turning the light OFF.

Lighting mode switch button is OFF (The button is not pushed.)

Short-circuit (+) and (-) of TR1 to TR4 respectively makes the trigger input status OFF, turning the light OFF. Releasing (+) and (-) makes the status ON, turning the light ON.

[Important]

Make sure that excessive force is not imposed on the wire and terminal block.
Do not install the product in which loads are constantly applied to the terminal block such as the wire being under tension.
When wiring the terminal block, use an applicable cable (AWG 14 to 24, tip processing length: 7 mm).

Dimensions

(Unit: mm)

●FLV-ATC21024-□

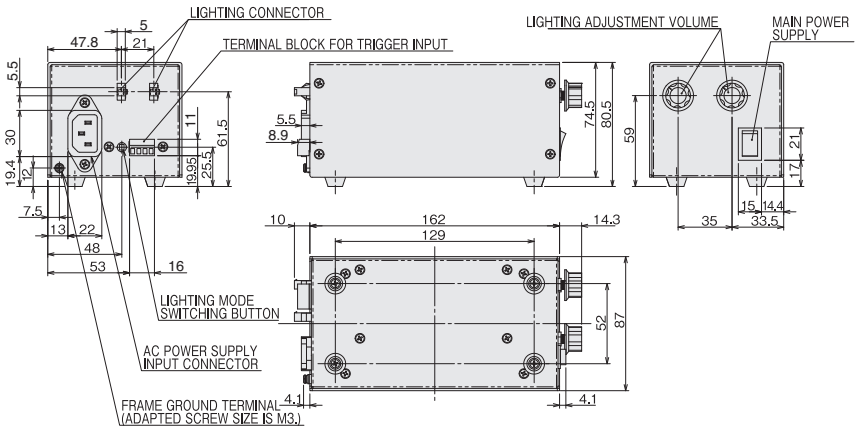

●FLV-ATC41024-□

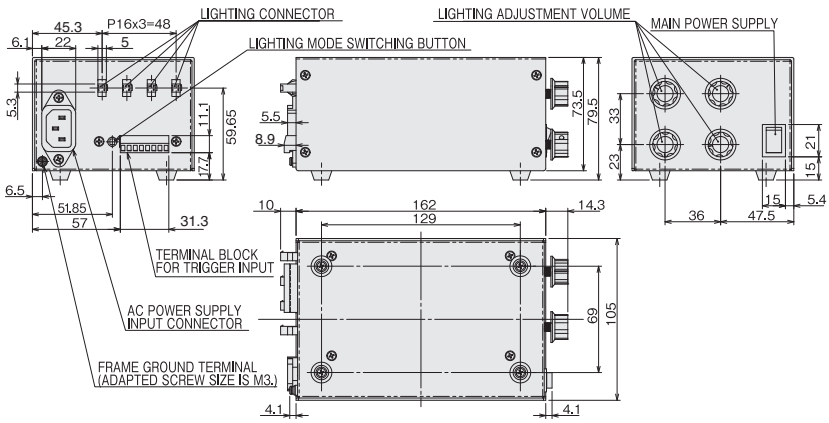

Lighting Controller for Spot Light FLV-ATC10405/-ATC40405

Part Names and Functions

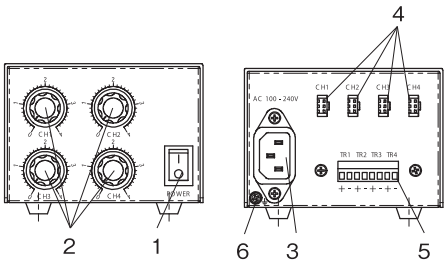

No.	Name	Description
1	Main power supply	Starts up the Controller when it is turned ON.
2	Lighting adjustment volume	Rotating the volume clockwise increases the emission intensity or counterclockwise decreases it.
3	AC power supply input connector	A terminal to supply AC power. Connect the provided AC input cable.
4	Lighting connector	Connects an LED lights.
5	Terminal block for trigger input	A terminal block for lighting illumination trigger input from outside to each lighting.
6	Frame ground terminal	A terminal for frame ground. Connect the ground line.

Specifications

Item / Model	FLV-ATC10405-□ *1	FLV-ATC40405-□ *1
Number of channels	1	4
Applicable light	FLV-EP series	
Power supply voltage *2	100 to 240 VAC, 50/60 Hz	
Current consumption	0.6 A max.	
Power of connected light	3 W max.	4ch total 12 W max. 3 W max. for 1ch
Drive method	Constant current method	
Lighting method	Trigger lighting, Continuous lighting	
Luminance control method	Current light adjustment : 0.4 A max.	
Trigger lighting	Turning the light off in synchronization with input from the trigger input terminal	
Trigger lighting delay time	T_on: 1000 μs max.	
External interface	Trigger input terminal block	
Dielectric strength	1500 VAC 50/60 Hz 1 min	
Insulation resistance	20 MΩ (500 VDC)	
Ambient temperature	Operating: 0 to 50°C, Storage: -15 to 60°C (with no icing or condensation)	
Ambient humidity	Operating/storage: 35% to 85% (with no condensation)	
Degree of protection	IP20 (IEC60529)	
Vibration resistance (destructive)	10 to 150 Hz, (0.2 mm double amplitude) 80 min each in X, Y, and Z directions	
Shock resistance (destructive)	150 m/s² 3 times each in 6 directions (up/down, left/right, forward/backward)	
Materials	Case: Aluminum	
Weight	Approx. 800 g	
Accessories	Instruction sheet, AC input cable *1	
Applicable standards	EN61326-1 *3	

*1. The suffixed symbol of the model name means the plug type of the accessory cable. A model name with no suffix means type A.
*2. This product is the exclusive use for apparatus inclusion in the industrial machine field.
This product cannot be used for the connection to electric power equipment, such as a common residence, store, and small establishment, because of nonconformity with to Electrical Appliance and Material Safety Law (PSE).
*3. Electromagnetic environment: Industrial electromagnetic environment (EN/IEC 61326-1 Table 2)
Also, the following condition is applied to the immunity test of this product.
There are case that Lighting brightness fluctuate Max 10%.

Analog Lighting Controller for FLV Series FLV-ATC Series

Connecting to External Trigger Input Terminal Block

- Connection of this terminal block is not required if lighting illumination trigger input from outside is not used.

<Connection of trigger input terminal block>

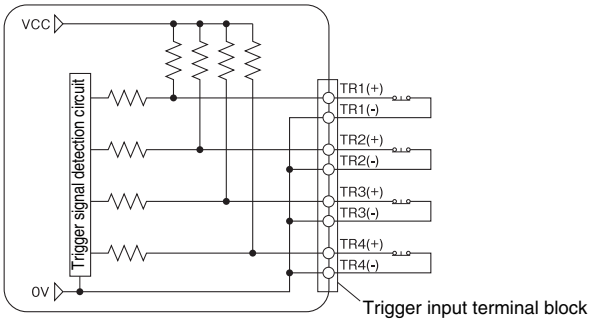

* Current flowing through the short circuit is less than 1 mA.

●FLV-ATC10405-□

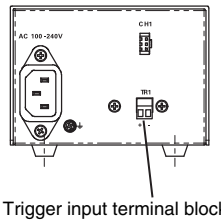

FLV-ATC40405-□

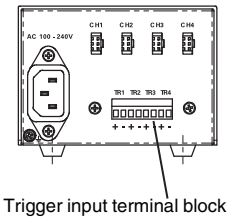

Short-circuiting (+) and (-) of TR1 to TR4 respectively makes the trigger input status OFF, turning the light OFF.
Releasing (+) and (-) makes the status ON, turning the light ON.

[Important]

- Make sure that excessive force is not imposed on the wire and terminal block.
- Do not install the product in which loads are constantly applied to the terminal block such as the wire being under tension.

When wiring the terminal block, use an applicable cable (AWG 14 to 24, tip processing length: 7 mm).

Dimensions

(Unit: mm)

●FLV-ATC10405-□

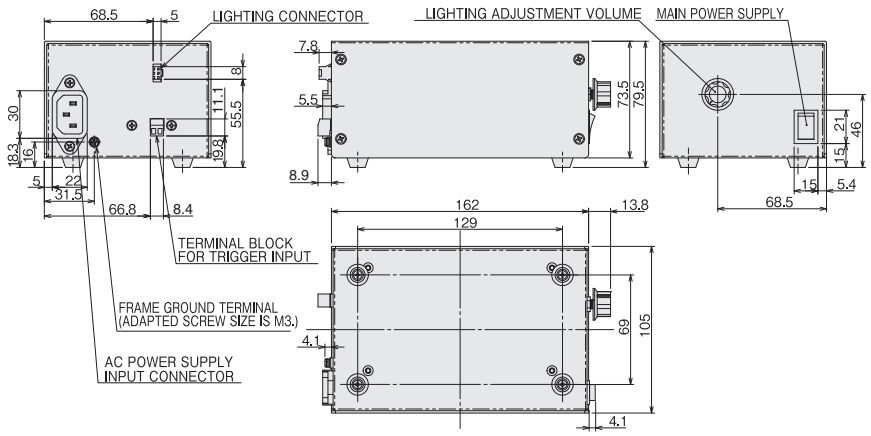

●FLV-ATC40405-□

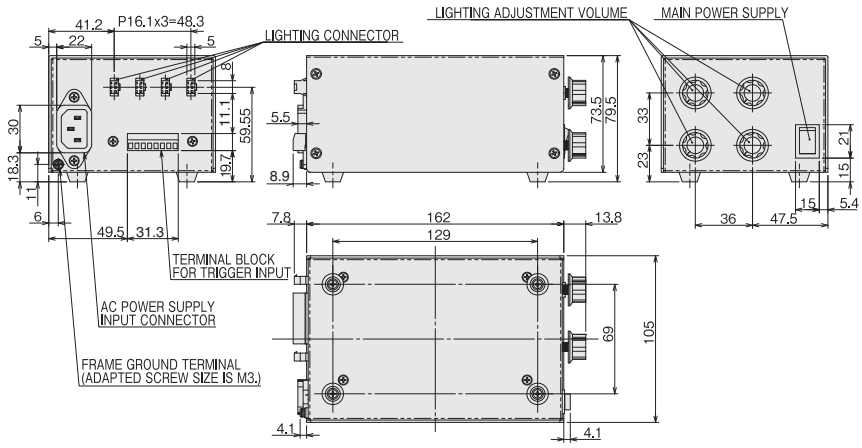

Lighting Controller for Line Light: FLV-ATC26024-100V/-200V

Part Names and Functions

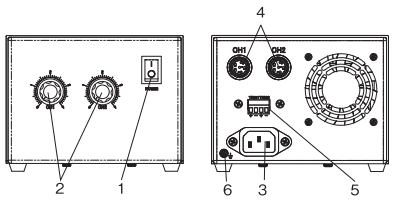

No.	Name	Description
1	Main power supply	Starts up the Controller when it is turned ON.
2	Lighting adjustment volume	Rotating the volume clockwise increases the emission intensity or counterclockwise decreases it.
3	AC power supply input connector	A terminal to supply AC power. Connect the provided AC input cable.
4	Lighting connector	Connects an LED lights.
5	Trigger input terminal block	A terminal block for lighting illumination trigger input from outside to each lighting.
6	Frame ground terminal	A terminal for frame ground. Connect the ground line.

Specifications

Item / Model	FLV-ATC26024-100V□ *1	FLV-ATC26024-200V□ *1
Number of channels	2	
Applicable light	FLV-LN series	
Power supply voltage *2	100 to 120 VAC, 50/60 Hz	200 to 240 VAC, 50/60 Hz
Current consumption	7 A max.	4 A max.
Power of connected light	2ch total 240 W max. 120 W max. for 1ch	
Drive method	Constant voltage method	
Lighting method	Trigger lighting, Continuous lighting	
Intensity control method	Current light adjustment : 5 A max.	
Luminance control method	Turning the light off in synchronization with input from the trigger input terminal	
Trigger lighting delay time	T_on: 500 µs max.	
External interface	Trigger input terminal block	
Dielectric strength	1500 VAC 50/60 Hz 1 min	
Insulation resistance	20 MΩ (500 VDC)	
Ambient temperature	Operating: 0 to 40°C, Storage: -15 to 60°C (with no icing or condensation)	
Ambient humidity	Operating/storage: 35% to 85% (with no condensation)	
Degree of protection	IP20 (IEC60529)	
Vibration resistance (destructive)	10 to 150 Hz, (0.2 mm double amplitude) 80 min each in X, Y, and Z directions	
Shock resistance (destructive)	150 m/s² 3 times each in 6 directions (up/down, left/right, forward/backward)	
Materials	Case: Aluminum	
Weight	Approx. 2.1 kg	
Accessories	Instruction sheet, AC input cable *1	
Applicable standards	EN61326-1 *3	

*1. The suffixed symbol of the model name means the plug type of the accessory cable. A model name with no suffix means type A.
*2. This product is the exclusive use for apparatus inclusion in the industrial machine field.
This product cannot be used for the connection to electric power equipment, such as a common residence, store, and small establishment, because of nonconformity with to Electrical Appliance and Material Safety Law (PSE).
*3. Electromagnetic environment: Industrial electromagnetic environment (EN/IEC 61326-1 Table 2)
Also, the following condition is applied to the immunity test of this product.
There are case that Lighting brightness fluctuate Max 10%.

Analog Lighting Controller for FLV Series FLV-ATC Series

Connecting to External Trigger Input Terminal Block

- Connection of this terminal block is not required if lighting illumination trigger input from outside is not used.

<Connection of trigger input terminal block>

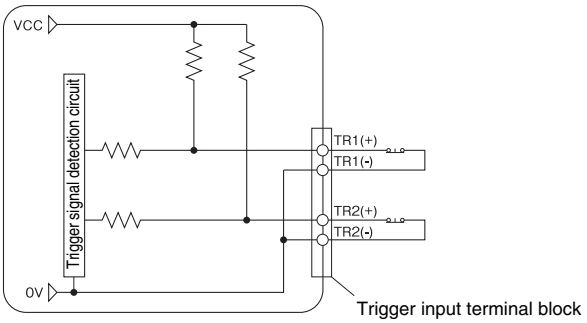

* Current flowing through the short circuit is less than 2 mA.

●FLV-ATC26024-□

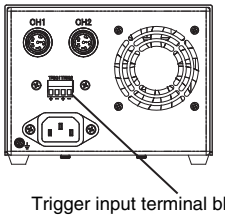

Short-circuiting (+) and (-) of TR1 to TR2 respectively makes the trigger input status OFF, turning the light OFF.
Releasing (+) and (-) makes the status ON, turning the light ON.

[Important]

- Make sure that excessive force is not imposed on the wire and terminal block.
- Do not install the product in which loads are constantly applied to the terminal block such as the wire being under tension.
- When wiring the terminal block, use an applicable cable (AWG 14 to 24, tip processing length: 7 mm).

Dimensions

(Unit: mm)

●FLV-ATC26024-□

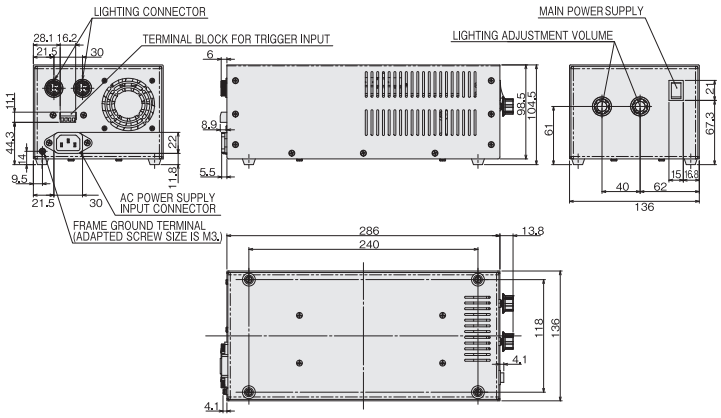

Digital Lighting Controller for FLV Series

3Z4S-LT IDGB Series

PWM light control power unit for LED lights

Product Features

- Fully synchronized external ON/OFF signals and lighting outputs.
- 3 types of operation using external ON/OFF signals: Normal, Repeat, and Single.
- Delay time from inputting an external ON signal to turning ON the light can be set.
- Brightness can be adjusted between 256 levels within a duty cycle range of 0 to 100% at a frequency of 125 kHz.
- Clear digital display for easy to read set values
- DIN track mounting

Ordering Information

Digital Lighting Controllers

Model	Number of channels	Applicable light *1			Input voltage	Output voltage	Capacity (W)
		Standard Light FLV Series *2	Spot Light FLV-EP Series *2	Line Light FLV-LN Series *2			
3Z4S-LT IDGB-50M2-L01	2	○	×	×	24 VDC	24 VDC	46
3Z4S-LT IDGB-150M4-L01	4	○	×	×			144

*1. ○:Connectable ×:Not connectable
*2. Standard light means all FLV-series Lights excluding the FLV-EP-series Spot Lights and the FLV-LN-series Line Lights.

External ON/OFF Cables

Model	Cable length	Weight
3Z4S-LT IC-MIL-20-1	1 m	Approx. 100 g
3Z4S-LT IC-MIL-20-2	2 m	Approx. 190 g
3Z4S-LT IC-MIL-20-3	3 m	Approx. 280 g
3Z4S-LT IC-MIL-20-5	5 m	Approx. 450 g
3Z4S-LT IC-MIL-20-10	10 m	Approx. 900 g

External Light Control Cables

Model	Cable length	Weight
3Z4S-LT IC-MIL-26-1	1 m	Approx. 110 g
3Z4S-LT IC-MIL-26-2	2 m	Approx. 220 g
3Z4S-LT IC-MIL-26-3	3 m	Approx. 330 g
3Z4S-LT IC-MIL-26-5	5 m	Approx. 540 g
3Z4S-LT IC-MIL-26-10	10 m	Approx. 1,070 g

Digital Lighting Controller for FLV Series 3Z4S-LT IDGB Series

Specifications

Item / Model	3Z4S-LT IDGB-50M2-L01	3Z4S-LT IDGB-150M4-L01
Rated capacity	46 W	144 W
Number of channels	2	4
Applicable light	FLV Series (excluding FLV-EP Series and FLV-LN Series)	
Power supply voltage	24 VDC±5%	
Current consumption	2.08 A max.	6.25 A max.
Power of connected light *1	2 ch total 46 W max. 46 W max. for 1 ch	4 ch total 144 W max. 70 W max. for 1 ch
	⚠ CAUTION **The output voltage of this product is 24 V. Do not connect any light with rated voltage of 12 V.**	
Drive method	Constant voltage method	
Lighting method	Continuous lighting	
Luminance control method	PWM light adjustment	
Light adjustment	256 levels (Duty ratio of 0 to 100% at a lighting frequency of 125 kHz) *3	
Delay time	0 to 9,000 μs in 1 μs increments (Actual output will be delayed by the sum of the external ON/OFF response time described below and the set delay time.)	
External ON/OFF response *2	High mode --- OFF → ON: 40 μs or less, ON → OFF: 10 μs or less Low mode --- OFF → ON: 10 μs or less, ON → OFF: 40 μs or less	
Ambient temperature	Operating: 0 to 50 °C, Storage: -20 to 65 °C, (with no icing or condensation)	
Ambient humidity	Operating and storage: 35% to 85% (with no condensation)	
Cooling method	Natural air cooling	Forced air cooling
Weight	Approx. 700 g	Approx. 1,000 g
Overvoltage category	Category I	
Applicable standards	EMC Directives: EN 55011 Group 1 Class A, EN 61000-6-2	
Environmental regulation	Conforms to RoHS Directive	
Pollution degree	2	

*1. When connecting lights to multiple channels, make sure that the total power consumption of the connected lights is within the specification of the lighting controller.
*2. Measured with a rated light connected.
*3. There will be some variation in light adjustment between units when the level is set between 0 and 10 or between 250 and 255.

Dimensions

(Unit: mm)

Digital Lighting Controllers IDGB-50M2-L01

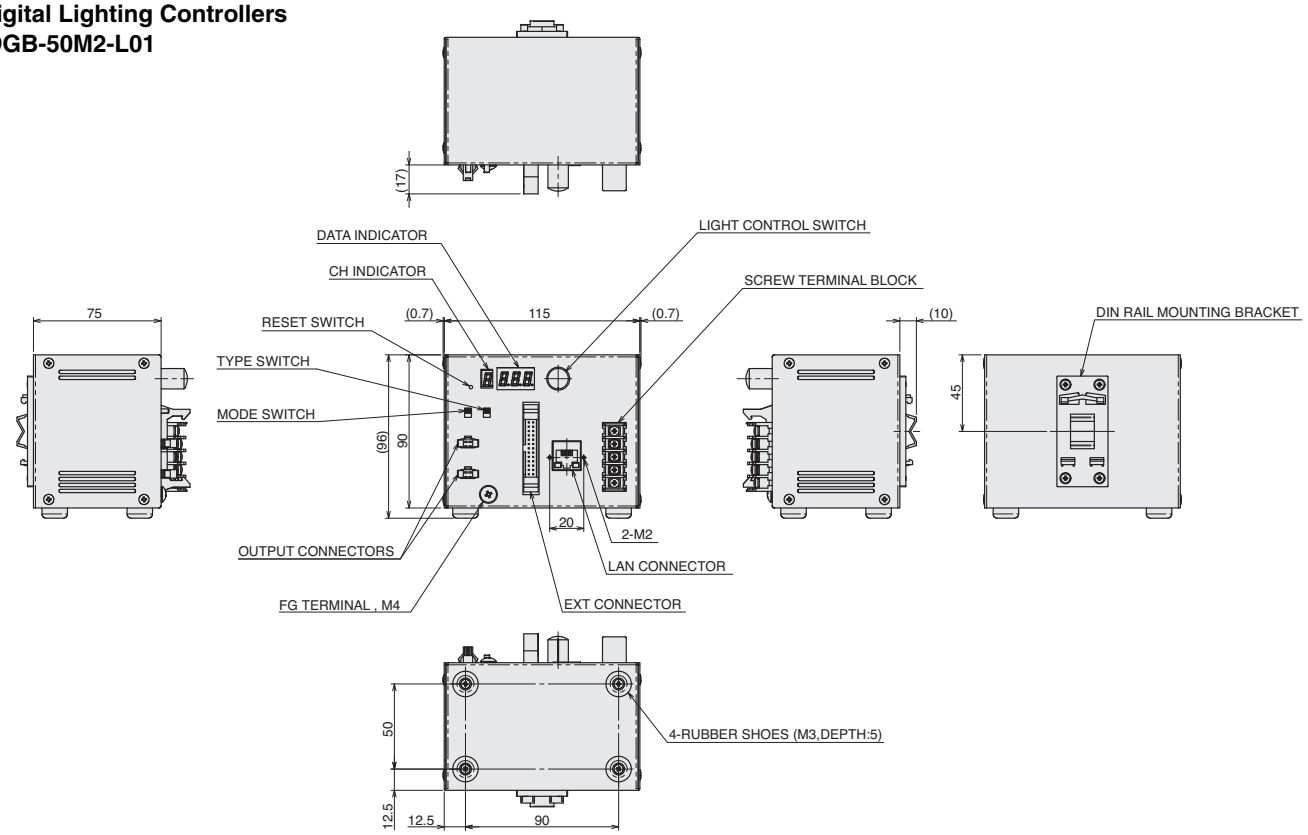

IDGB-150M4-L01

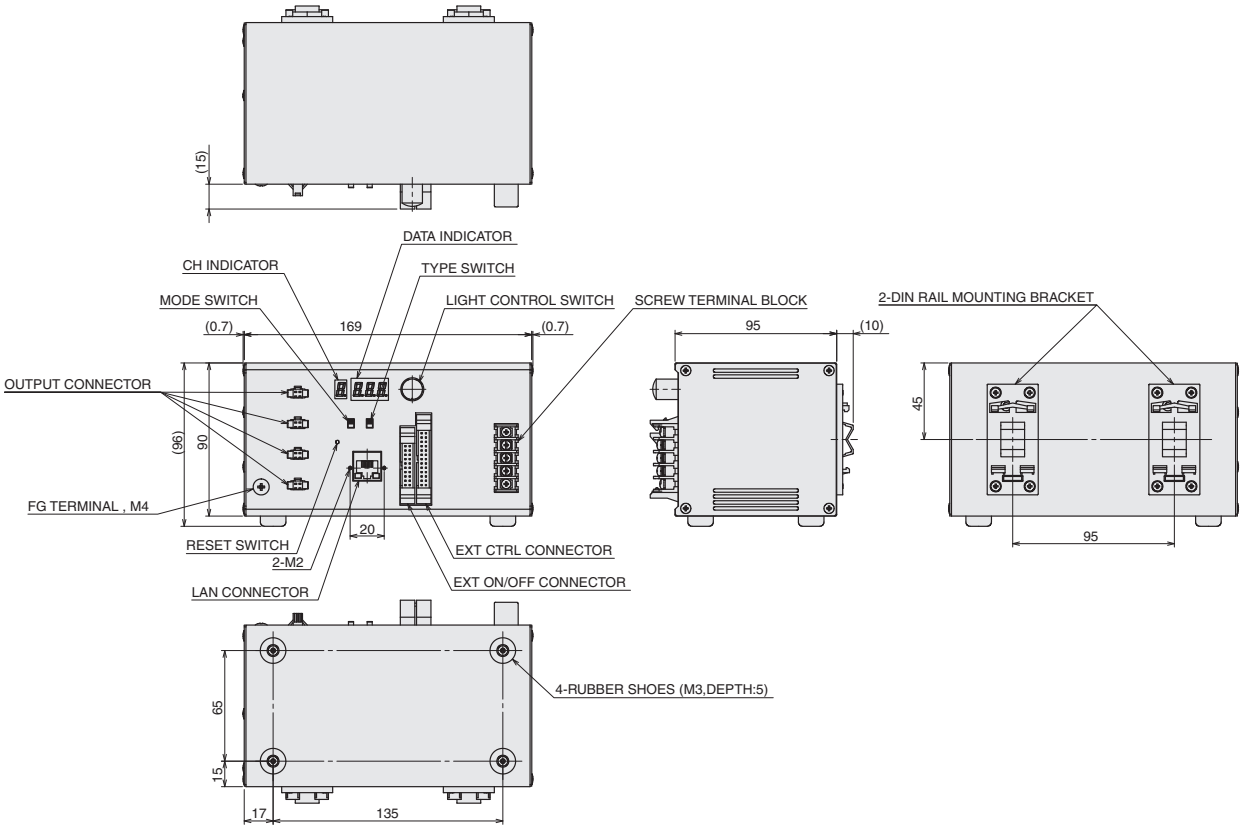

External ON/OFF Cables
IC-MIL-20-□

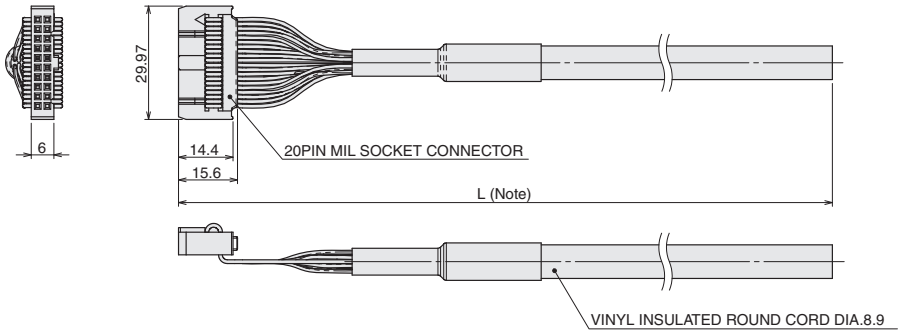

Note: Cable length L is as follows by the type.

Type	Cable length L
3Z4S-LT IC-MIL-20-1	1,000
3Z4S-LT IC-MIL-20-2	2,000
3Z4S-LT IC-MIL-20-3	3,000
3Z4S-LT IC-MIL-20-5	5,000
3Z4S-LT IC-MIL-20-10	10,000

External Light Control Cables
IC-MIL-26-□

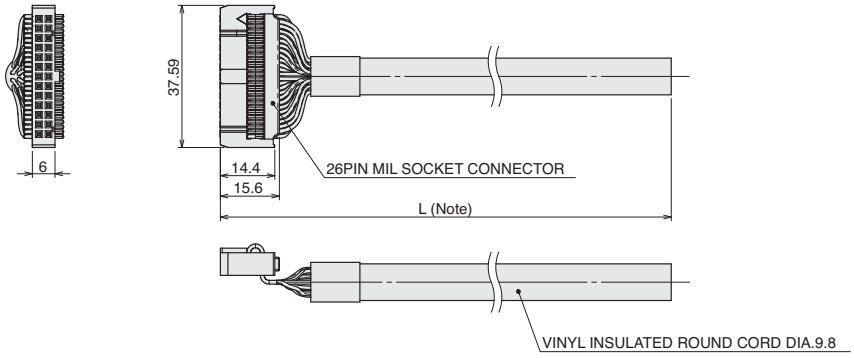

Note: Cable length L is as follows by the type.

Type	Cable length L
3Z4S-LT IC-MIL-26-1	1,000
3Z4S-LT IC-MIL-26-2	2,000
3Z4S-LT IC-MIL-26-3	3,000
3Z4S-LT IC-MIL-26-5	5,000
3Z4S-LT IC-MIL-26-10	10,000

Options for FLV Series

Cable/Diffusion Plate

Cable

Ordering Information

Series	Type	Model	Cable Length	Weight	Dimensions
Extension Cable for Standard Light *1	Standard Cable	FLV-XC1	1 m	Approx. 30g	A
		FLV-XC2	2 m	Approx. 50g	
		FLV-XC3	3 m	Approx. 70g	
		FLV-XC5	5 m	Approx. 110g	
		FLV-XC10	10 m	Approx. 210g	
	Bend resistant Cable	FLV-XC1R	1 m	Approx. 40g	B
		FLV-XC2R	2 m	Approx. 60g	
		FLV-XC3R	3 m	Approx. 80g	
		FLV-XC5R	5 m	Approx. 130g	
		FLV-XC10R	10 m	Approx. 250g	
Extension Cable for Spot Light	Standard Cable	FLV-XC1EP	1 m	Approx. 30g	C
		FLV-XC2EP	2 m	Approx. 50g	
		FLV-XC3EP	3 m	Approx. 70g	
		FLV-XC5EP	5 m	Approx. 110g	
	Bend resistant Cable	FLV-XC1EPR	1 m	Approx. 40g	D
		FLV-XC2EPR	2 m	Approx. 60g	
		FLV-XC3EPR	3 m	Approx. 80g	
		FLV-XC5EPR	5 m	Approx. 130g	
Extension Cable for Line Light	Standard Cable	FLV-XC1LN	1 m	Approx. 200g	E
		FLV-XC2LN	2 m	Approx. 270g	
		FLV-XC3LN	3 m	Approx. 320g	
		FLV-XC5LN	5 m	Approx. 440g	
Branch Cable for Standard Light *1	Standard Cable	FLV-XC1S2	1 m	Approx. 30g	F
		FLV-XC2S2	2 m	Approx. 50g	
		FLV-XC3S2	3 m	Approx. 80g	
		FLV-XC5S2	5 m	Approx. 120g	

*1. Standard light means all FLV-series Lights excluding the FLV-EP-series Spot Lights and the FLV-LN-series Line Lights.

Dimensions

(Unit: mm)

A FLV-XC□

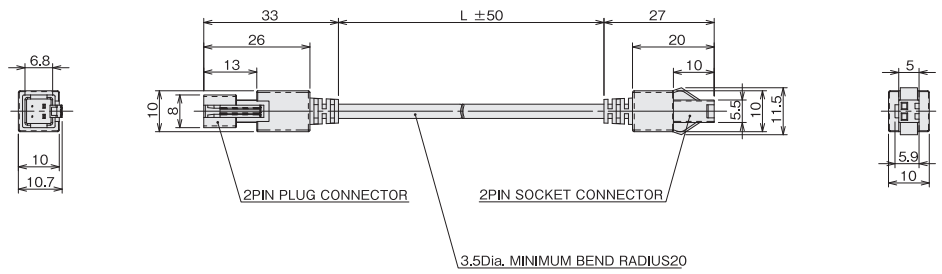

Model	L
FLV-XC1	1,000
FLV-XC2	2,000
FLV-XC3	3,000
FLV-XC5	5,000
FLV-XC10	10,000

B FLV-XC□R

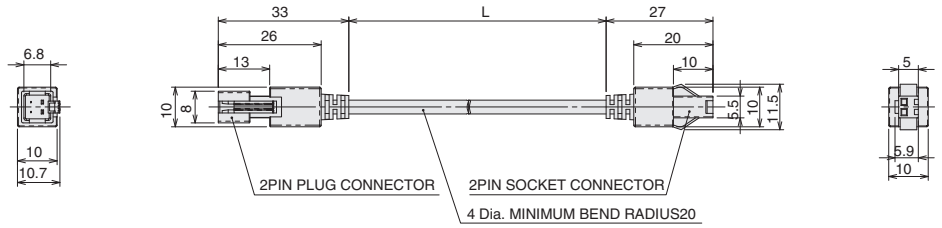

Model	L
FLV-XC1R	1,000
FLV-XC2R	2,000
FLV-XC3R	3,000
FLV-XC5R	5,000
FLV-XC10R	10,000

C FLV-XC□EP

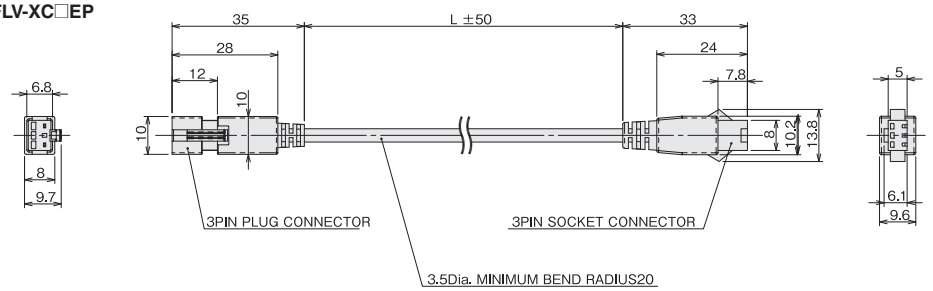

Model	L
FLV-XC1EP	1,000
FLV-XC2EP	2,000
FLV-XC3EP	3,000
FLV-XC5EP	5,000

D FLV-XC□EPR

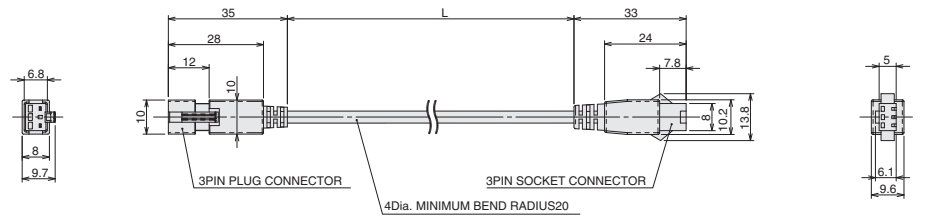

Model	L
FLV-XC1EPR	1,000
FLV-XC2EPR	2,000
FLV-XC3EPR	3,000
FLV-XC5EPR	5,000

E FLV-XC□LN

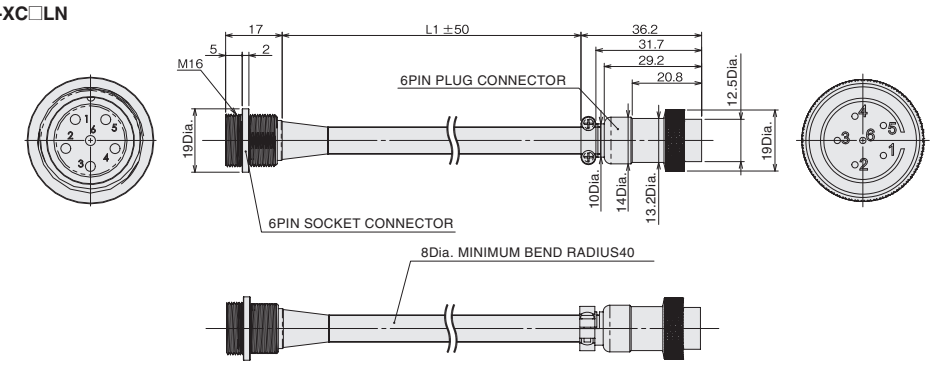

Model	L
FLV-XC1LN	1,000
FLV-XC2LN	2,000
FLV-XC3LN	3,000
FLV-XC5LN	5,000

F FLV-XC□S2

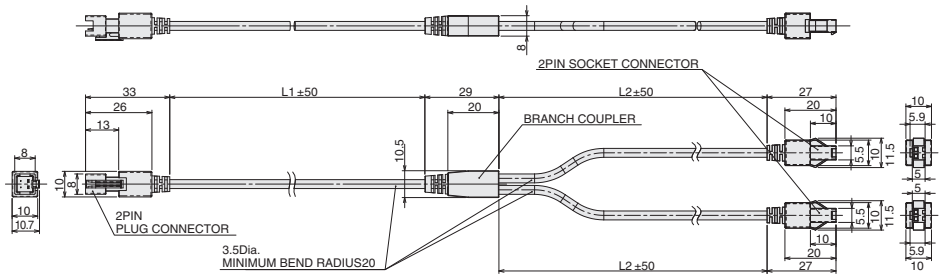

Model	L1	L2
FLV-XC1S2	500	500
FLV-XC2S2	1,000	1,000
FLV-XC3S2	1,000	2,000
FLV-XC5S2	2,000	3,000

Diffusion Plate/Polarization Plate

Ordering Information

●Diffusion Plate

Type	Model			Applicable light
Transparency rate	High	Middle	Low	
Diffusivity	Low	Middle	High	
For FLV-DR-series Direct ring light	FLV-DR3220DF	FLV-DR3220DF50	FLV-DR3220DF30	FLV-DR3220□
	FLV-DR4415DF	FLV-DR4415DF50	FLV-DR4415DF30	FLV-DR4415□
	FLV-DR5030DF	FLV-DR5030DF50	FLV-DR5030DF30	FLV-DR5030□
	FLV-DR6030DF	---	---	FLV-DR6030UV
	FLV-DR6615DF	FLV-DR6615DF50	FLV-DR6615DF30	FLV-DR6615□
	FLV-DR7000DF	FLV-DR7000DF50	FLV-DR7000DF30	FLV-DR7000□
	FLV-DR7030DF	FLV-DR7030DF50	FLV-DR7030DF30	FLV-DR7030□
	FLV-DR7530DF	---	---	FLV-DR7530UV
	FLV-DR9000DF	FLV-DR9000DF50	FLV-DR9000DF30	FLV-DR9000□
	FLV-DR9030DF	FLV-DR9030DF50	FLV-DR9030DF30	FLV-DR9030□
	FLV-DR9215DF	FLV-DR9215DF50	FLV-DR9215DF30	FLV-DR9215□
	FLV-DR12030DF	FLV-DR12030DF50	FLV-DR12030DF30	FLV-DR12030□
For FLV-DL-series Low angle ring light	FLV-DL5890DF	FLV-DL5890DF50	FLV-DL5890DF30	FLV-DL5890□
	FLV-DL7260DF	FLV-DL7260DF50	FLV-DL7260DF30	FLV-DL7260□
	FLV-DL12060DF	FLV-DL12060DF50	FLV-DL12060DF30	FLV-DL12060□
	FLV-DL15060DF	FLV-DL15060DF50	FLV-DL15060DF30	FLV-DL15060□
For FLV-BR-series Bar light	FLV-BR6022DF	FLV-BR6022DF50	FLV-BR6022DF30	FLV-BR6022□
	FLV-BR6424DF	---	---	FLV-BR6424UV
	FLV-BR8532DF	FLV-BR8532DF50	FLV-BR8532DF30	FLV-BR8532□
	FLV-BR11222DF	FLV-BR11222DF50	FLV-BR11222DF30	FLV-BR11222□
	FLV-BR11624DF	---	---	FLV-BR11624UV
	FLV-BR14030DF	FLV-BR14030DF50	FLV-BR14030DF30	FLV-BR14030□
	FLV-BR15020DF	FLV-BR15020DF50	FLV-BR15020DF30	FLV-BR15020□
	FLV-BR21222DF	FLV-BR21222DF50	FLV-BR21222DF30	FLV-BR21222□
	FLV-BR21230DF	FLV-BR21230DF50	FLV-BR21230DF30	FLV-BR21230□
	FLV-BR38037DF	FLV-BR38037DF50	FLV-BR38037DF30	FLV-BR38037□
	FLV-BR48031DF	FLV-BR48031DF50	FLV-BR48031DF30	FLV-BR48031□

●Polarization Plate

Type		Model	Applicable light
For FLV-DR-series Direct ring light		FLV-DR3220PL	FLV-DR3220□
		FLV-DR4415PL	FLV-DR4415□
		FLV-DR5030PL	FLV-DR5030□
		FLV-DR6615PL	FLV-DR6615□
		FLV-DR7000PL	FLV-DR7000□
		FLV-DR7030PL	FLV-DR7030□
		FLV-DR9000PL	FLV-DR9000□
		FLV-DR9030PL	FLV-DR9030□
		FLV-DR9215PL	FLV-DR9215□
		FLV-DR12030PL	FLV-DR12030□
For FLV-DL-series Low angle ring light		FLV-DL7260PL	FLV-DL7260□
		FLV-DL12060PL	FLV-DL12060□
		FLV-DL15060PL	FLV-DL15060□
For FLV-BR-series Bar light	Polarization direction: Long side ↔	FLV-BR6022PL	FLV-BR6022□
		FLV-BR8532PL	FLV-BR8532□
		FLV-BR11222PL	FLV-BR11222□
		FLV-BR14030PL	FLV-BR14030□
		FLV-BR15020PL	FLV-BR15020□
		FLV-BR21222PL	FLV-BR21222□
		FLV-BR21230PL	FLV-BR21230□
		FLV-BR38037PL	FLV-BR38037□
		FLV-BR48031PL	FLV-BR48031□
	Polarization direction: Short side ↕	FLV-BR6022PL-V	FLV-BR6022□
		FLV-BR8532PL-V	FLV-BR8532□
		FLV-BR11222PL-V	FLV-BR1122□
		FLV-BR14030PL-V	FLV-BR14030□
		FLV-BR15020PL-V	FLV-BR15020□
		FLV-BR21222PL-V	FLV-BR21222□
		FLV-BR21230PL-V	FLV-BR21230□
		FLV-BR38037PL-V	FLV-BR38037□
		FLV-BR48031PL-V	FLV-BR48031□

FL-MD Series

RGB full color light flexibly changes illumination directions, colors, and light intensities.

Product Features

- Combination of illumination directions, colors, and light intensities.
- Flexible illumination patterns for additional objects or inspection items.

Illumination Structure

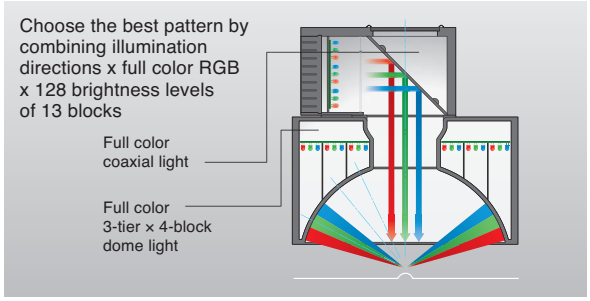

Applications

Standard Lighting System

Different lights are required for different defects

Glass surface inspection	Wire inspection
Coaxial light	Low angle light

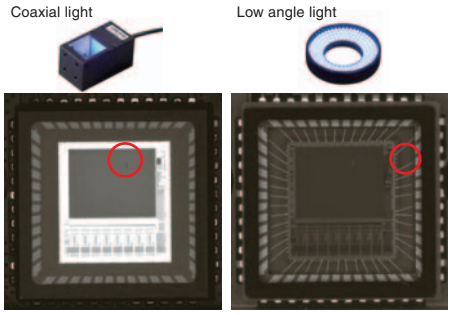

FL-MD Series

One light clearly shows both broken wires and dirt on elements

Inspection for broken wires and dirt on elements

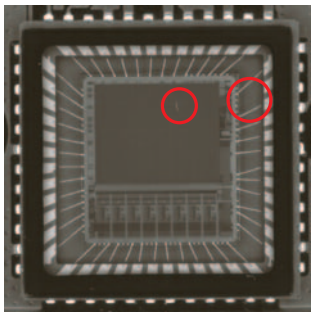

MDMC Light FL-MD Series

Ordering Information

Model	Color	Dimensions			Weight (g)
		Outside dimensions (mm)	Height (mm)	Drawing	
FL-MD90MC	RGB full color	125 × 90	82	A	800
FL-MD180MC	RGB full color	215 × 180	154	B	3000

Note: Refer to page 69 for LED Characteristics.

Specifications

Item / Model	FL-MD90MC	FL-MD180MC
Applicable controller	FH series	
Applicable camera	FH-S series, FZ-S series	
Lighting color (peak wavelength)	R: Red (Typ.635nm), G: Green (Typ.525nm), B: Blue (Typ.465nm)	
Light source	LED	
LED safety	W,B: Risk Group 2, R,G: Risk Group 1	W,G,B: Risk Group 2, R: Risk Group 1
Power supply voltage	24 VDC±10% (including ripple)	
Recommended power supply	S8VK-G12024 (manufactured by OMRON, 24 VDC, 5 A, 120 W)	
Current consumption	1.5 A max.	3.0 A max.
Drive method	Constant voltage method	
Lighting method	Trigger lighting	
Luminance control method	Duty light adjustment: PWM frequency of 200 kHz, light adjustment of 128 levels (configured with vision system controller)	
Trigger lighting	Lighting in synchronization with trigger input timing from the controller (configured with vision system controller).	
Lighting duration setting	Auto setting in accordance with shutter speed.	
Lighting time control	Set with vision system controller or set in accordance with shutter speed.	
External interface	Camera connection cable (directly connected with the main unit) Cable length: 500 mm	
Ambient temperature	Operating: 0 to 40°C, Storage: -15 to 60°C (with no icing or condensation)	
Ambient humidity	Operating and storage: 35% to 85% (with no condensation)	
Degree of protection	IP20 (IEC60529)	
Vibration resistance	10 to 150 Hz, (0.35mm half-amplitude) 80 min each in X, Y, and Z directions	
Shock resistance	150 m/s² 3 times each in 6 directions (up/down, left/right, forward/backward)	
Material	Case: Aluminum, PC, PMMA Cable: PVC	
Weight	Approx. 0.8 kg	Approx. 3.0 kg
Accessories	Instruction Sheet, Compliance Sheet, 24 V power supply terminal block (male)	

Note: 1. Turn ON the power of this product and vision system controller at the same time or this product first.
2. This light complies with the EN standard (EN61326-1)
(Electromagnetic environment: Industrial electromagnetic environment (EN/IEC 61326-1 Table 2))
Also, the following condition is applied to the immunity test of this product.
There may be cases that light brightness fluctuates within 10%.
3. This light complies with the KC standard.

Dimensions

(Unit:mm)

A FL-MD90MC

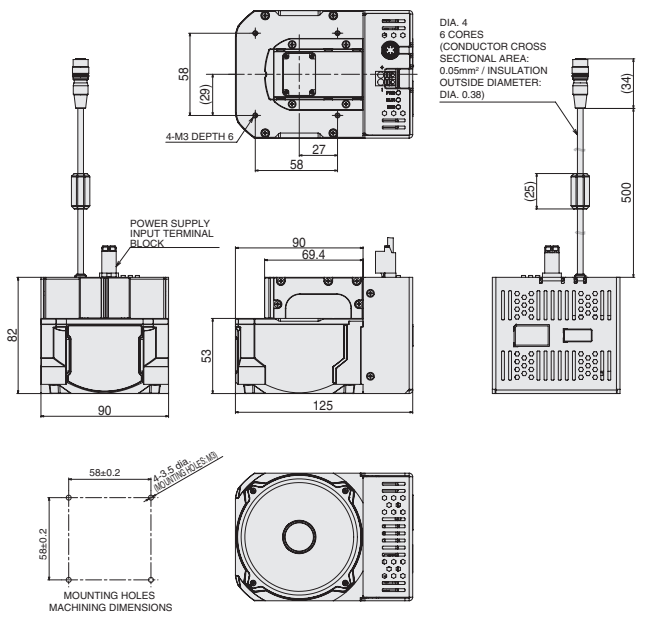

Tightening torque (M3 screw): 0.54 N•m

B FL-MD180MC

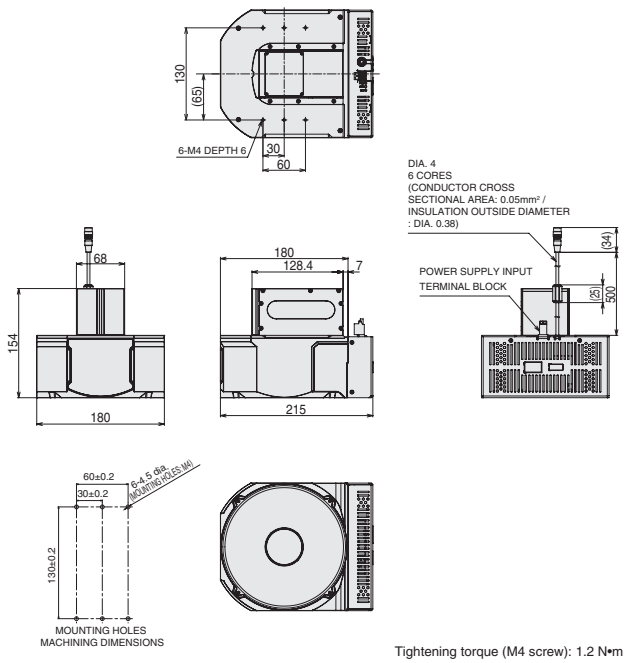

Tightening torque (M4 screw): 1.2 N•m

Photometric Stereo Light
FL-PS Series

Shows defects accurately.

Product Features

- Captures images under different illumination directions to extract “characters” and “scratches and dents“.

Illumination Structure

Four lights are lit in turn, and variations in brightness are analyzed. Printed characters with little variation in brightness even under different illumination directions are extracted as texture, and a dent with huge variation in brightness is extracted as a shape.

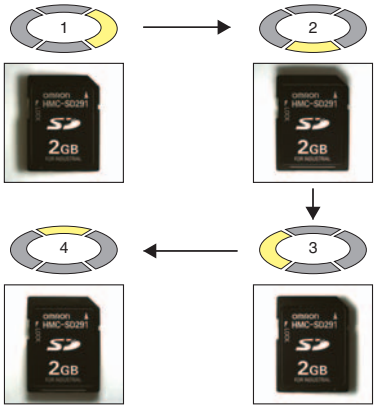

Applications

Inspection of dents on characters

Standard light

Extracts scratches only

(Shape)

Extracts characters only

(Texture)

Photometric Stereo Light FL-PS Series

Ordering Information

Model	Color	Dimensions				Lighting controller			Weight (g)
		External ring diameter (mm)	Internal ring diameter (mm)	Height (mm)	Drawing	FL-STC□	FL-TCC□	FL-TCC1PS	
FL-PS90W	White	90 dia.	50 dia.	35	A	×	×	○	200
FL-PS140W	White	140 dia.	100 dia.	35	B	×	×	○	350
FL-PS260W	White	260 dia.	200 dia.	35	C	×	×	○	800

Note: Refer to page 69 for LED Characteristics.
○: Connectable ×: Not connectable

Specifications

Item / Model	FL-PS90W	FL-PS140W	FL-PS260W
Applicable controller	FL-TCC1PS		
Lighting color	W: White		
Light source	LED		
LED safety	Risk group 2		
Power consumption	32W	47W	61W
Ambient temperature	Operating: 0 to 40°C Storage: -15 to 60°C (with no icing nor no condensation)		
Ambient humidity	Operating and storage: 35% to 85% (no condensation)		
Degree of protection	IP20(IEC60529)		
Vibration resistance (destructive)	10 to 150 Hz, (0.35mm half-amplitude) 80 min. each in X, Y, and Z directions		
Shock resistance (destructive)	150 m/s² 3 times each in 6 directions (up/down, left/right, forward/backward)		
Materials	Case: Aluminum, PMMA		
Weight	Approx. 200g	Approx. 350g	Approx. 800g
Accessories	INSTRUCTION SHEET (THIS SHEET), Compliance Sheet		

Dimensions

(Unit:mm)

A FL-PS90W

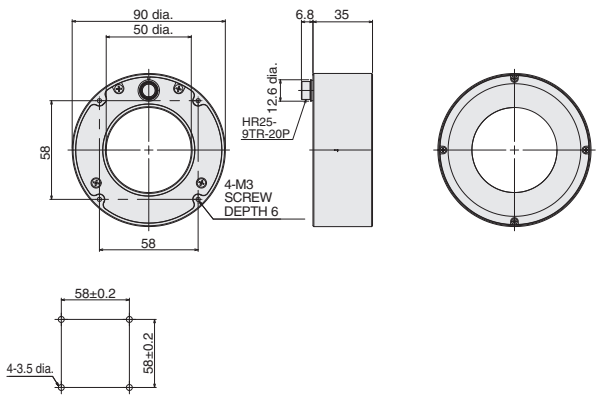

Tightening torque (M3 screw): 0.54 N•m

B FL-PS140W

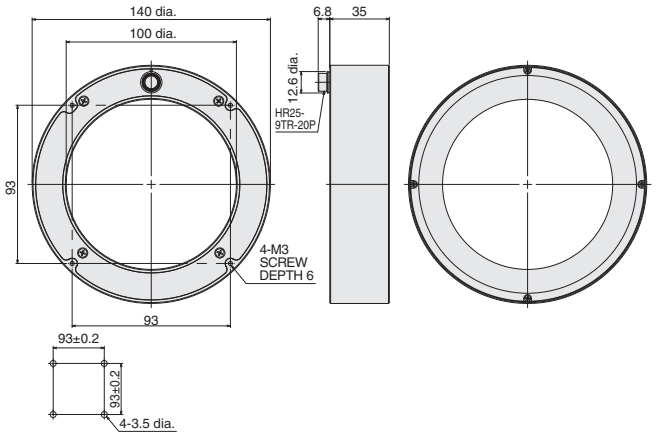

Tightening torque (M3 screw): 0.54 N•m

C FL-PS260W

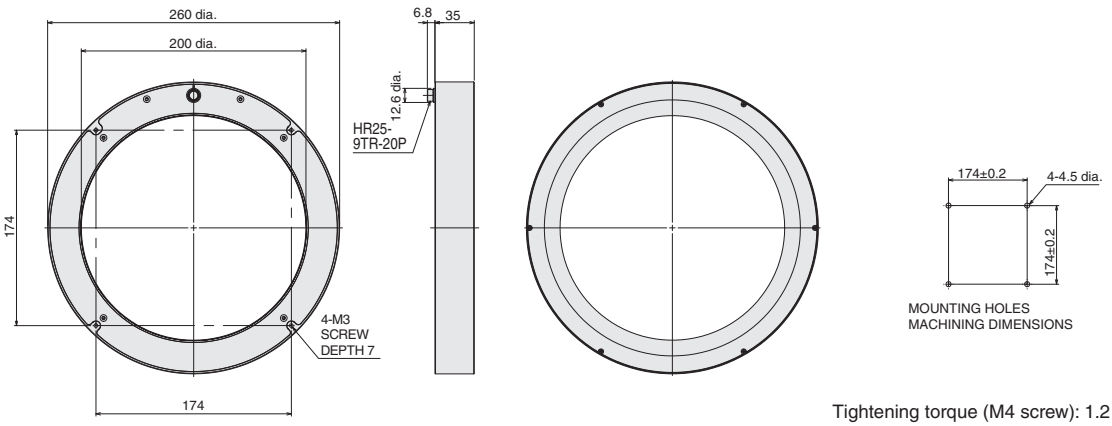

Tightening torque (M4 screw): 1.2 N•m

Bar Light

FL-BR Series

The highest level* of brightness in the industry.
This series is structured for adaptable wiring and mounting.

* Based on OMRON testing in November 2010.

Product Features

- High-brightness ODR lighting beyond the limitations of LEDs.
- Stable inspection even for high-speed applications.
- Bright even through a polarizing filter.
- Easy wiring, mounting, and adjustment.

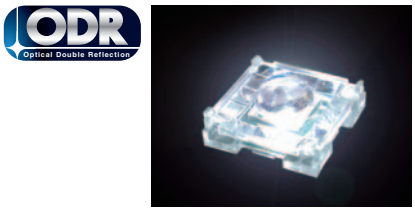

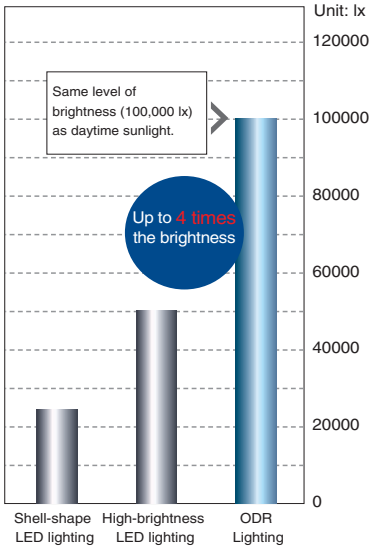

Wiring

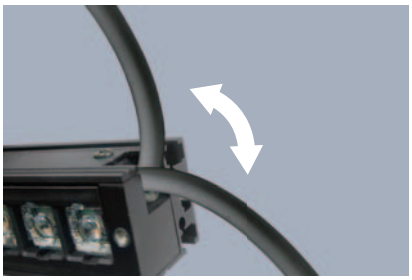

The cable can extend from either direction, allowing for horizontal or vertical wiring layouts on the mounting surface.

Mounting and Adjustment

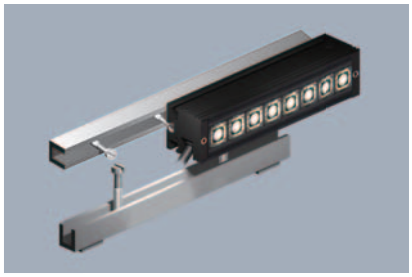

The light is structured for mounting with nuts to an arm on the back or side surfaces.
Minute changes in the position can be achieved by sliding the light.

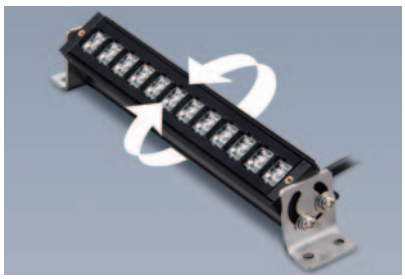

Specialized mounting brackets enable mounting at a flexible angle.

Illumination Structure

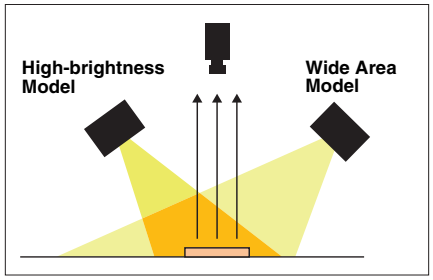

Lighting Intensity Distribution Characteristics

High-brightness Model (FL-BR9120W-H)

X axis (long axis)

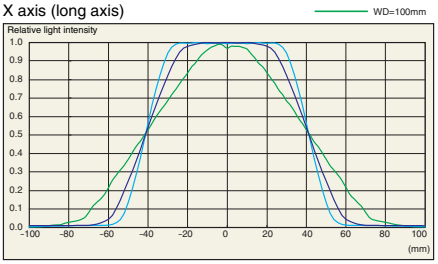

Y axis (short axis)

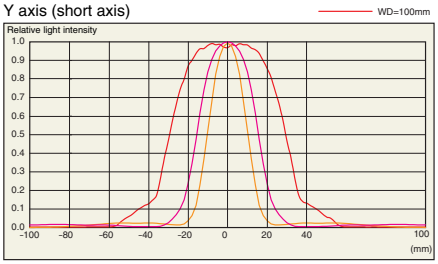

Wide Area Model (FL-BR9120W)

X axis (long axis)

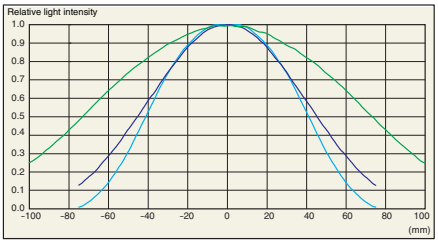

Y axis (short axis)

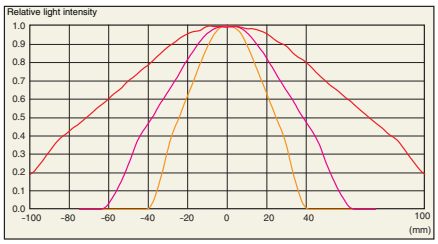

Applications

Standard light

It is difficult to read characters with low contrast.

FL Series

Sharp images are created of both two-dimensional codes and characters.

Standard light

Inspection is not possible because of workpiece blurring or a lack of brightness.

FL Series

Complete extraction of edges and characters.

Ordering Information

Model	Color	Type	Dimensions				Controller			Weight (g)	Options	
			Lighting Area Dimension (mm)	Outside Dimension (mm)	Height (mm)	Drawing	FL-STC□	FL-TCC□	FL-TCC1PS		Diffusion Plate	Polarization Plate
FL-BR5020W	WHITE	Wide Area Model	40.8x9	49.8x20	20	A	○	○	×	40	○	×
FL-BR5020W-H	WHITE	High-brightness Model										
FL-BR9120W	WHITE	Wide Area Model	81.6x9	90.6x20	20	B	○	○	×	70	○	×
FL-BR9120W-H	WHITE	High-brightness Model										
FL-BR13120W	WHITE	Wide Area Model	122.4x9	131.4x20	20	C	○	○	×	100	○	×
FL-BR13120W-H	WHITE	High-brightness Model										

Note: Refer to page 69 for LED Characteristics.
The color of white LEDs can vary due to intrinsic characteristics. Confirm suitability for the application in advance.
○: Applicable ×: Not applicable

Specifications

Model	Wide Area Model	High-brightness Model	Wide Area Model	High-brightness Model	Wide Area Model	High-brightness Model
	FL-BR5020W	FL-BR5020W-H	FL-BR9120W	FL-BR9120W-H	FL-BR13120W	FL-BR13120W-H
Light source	White LEDs					
Vibration resistance	10 to 150 Hz (Double amplitude: 0.7 mm), 80 min each in X, Y, and Z directions					
Shock resistance	150 m/s² 3 times each in 6 directions					
Ambient temperature	Operating: 0 to 40°C, Storage: -15 to 60°C (with no icing or condensation)					
Ambient humidity	Operating/storage: 35% to 85% (with no condensation)					
Ambient atmosphere	No corrosive gases.					
Degree of protection	IEC60259 IP20					
Weight	Approx. 40 g		Approx. 70 g		Approx. 100 g	
Materials	Case: Aluminum; Cover, side parts, and lens: PC; Cable: Heat resistant polyvinyl chloride; Connector: Thermoplastic resin with glass					
LED safety	Risk Group 2 (IEC 62471)					
Accessories	Instruction sheet					

The color of white LEDs can vary due to intrinsic characteristics.
Confirm suitability for the application in advance.

Dimensions

(Unit:mm)

A FL-BR5020W(-H)

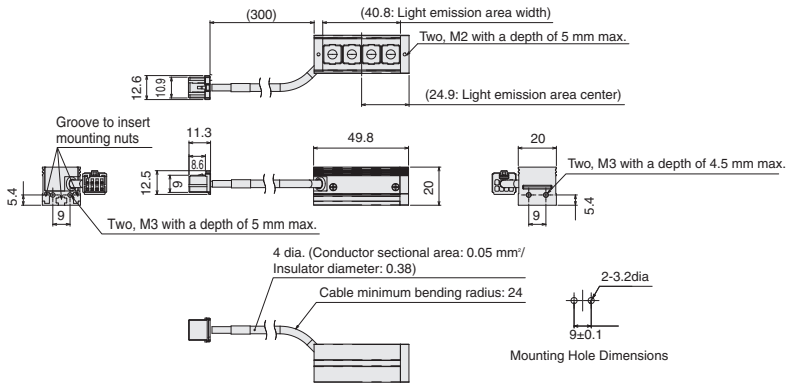

B FL-BR9120W(-H)

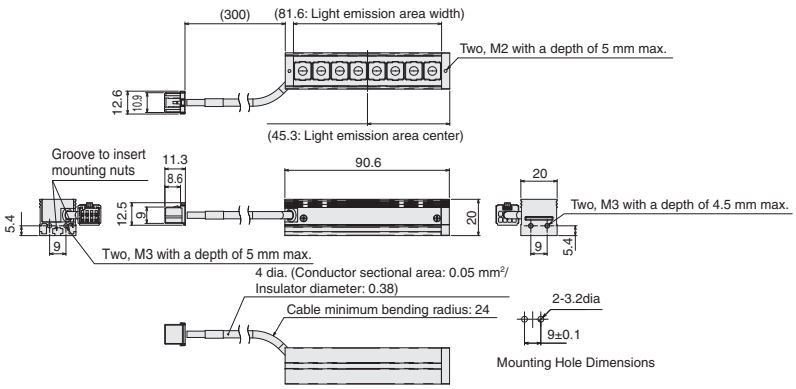

C FL-BR13120W(-H)

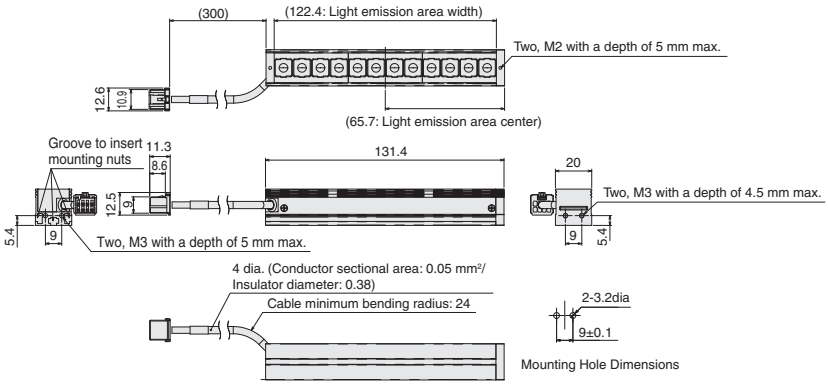

Direct Ring Light

FL-DR Series

Clear Images with Industry's Best Level* of Brightness and Illumination over a Wide Field of View

* Based on OMRON testing in November 2010.

Product Features

- High brightness in a small package.
- Wide range of working distance.

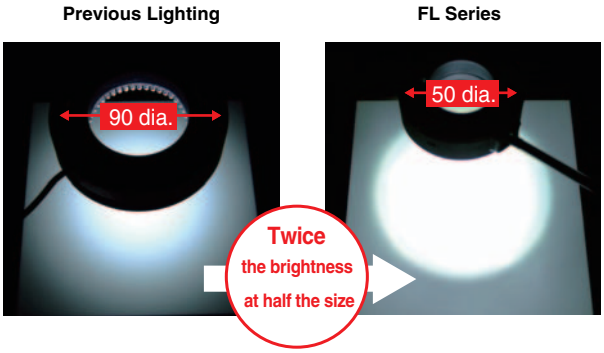

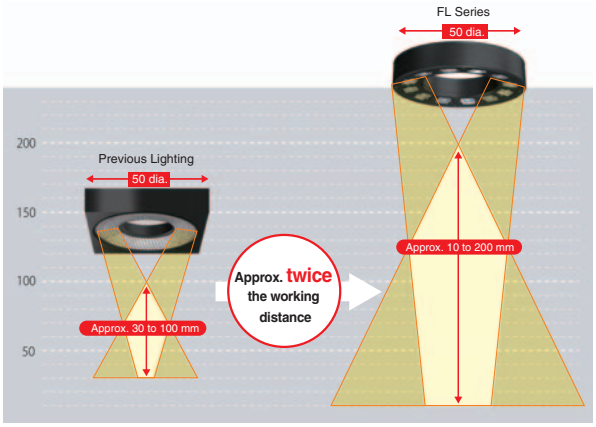

Illumination Structure

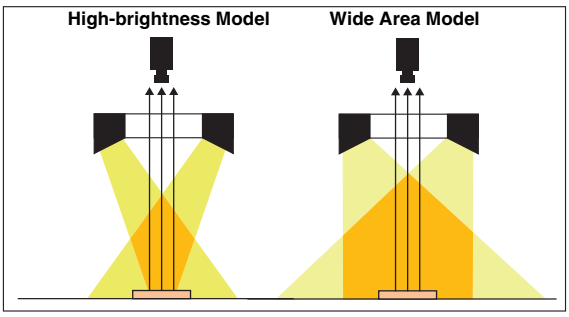

Lighting Intensity Distribution Characteristics

High-brightness Model (FL-DR50W-H)

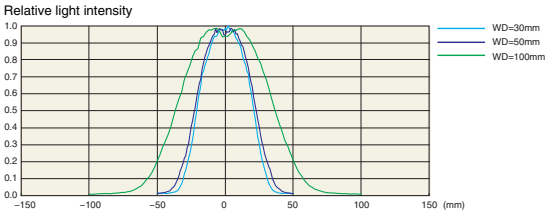

Wide Area Model (FL-DR50W)

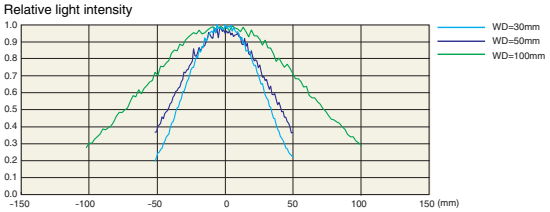

Applications

Previous Lighting

Faster lines make it necessary to increase shutter speeds, but then the clarity of workpiece images decreases.

FL-series

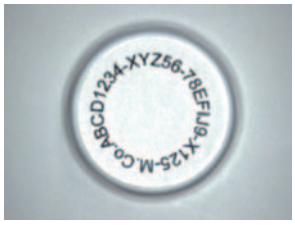

More than sufficient brightness is provided for high-speed lines.

Previous Lighting

It was necessary to create different inspection standards for each section.

FL-series

With uniform lighting from corner to corner, it is possible to inspect.

Ordering Information

Model	Color	Type	Dimensions				Controller			Weight (g)	Options	
			External Ring Diameter (mm)	Internal Ring Diameter (mm)	Lighting Angle (Deg)	Drawing	FL-STC□	FL-TCC□	FL-TCC1PS		Diffusion Plate	Polarization Plate
FL-DR32W	WHITE	Wide Area Model	32 dia.	10 dia.	20 deg.	A	○	○	×	25	○	○
FL-DR32W-H	WHITE	High-brightness Model										
FL-DR50W	WHITE	Wide Area Model	50 dia.	28 dia.	10 deg.	B	○	○	×	30	○	○
FL-DR50W-H	WHITE	High-brightness Model										
FL-DR90W	WHITE	Wide Area Model	90 dia.	50 dia.	20 deg.	C	○	○	×	70	○	○
FL-DR90W-H	WHITE	High-brightness Model								80		

Note: Refer to page 69 for LED Characteristics.
The color of white LEDs can vary due to intrinsic characteristics. Confirm suitability for the application in advance.
○: Applicable ×: Not applicable

Specifications

Model	Wide Area Model	High-brightness Model	Wide Area Model	High-brightness Model	Wide Area Model	High-brightness Model
	FL-DR32W	FL-DR32W-H	FL-DR50W	FL-DR50W-H	FL-DR90W	FL-DR90W-H
Light source	White LEDs					
Vibration resistance	10 to 150 Hz (Double amplitude: 0.7 mm), 80 min each in X, Y, and Z directions					
Shock resistance	150 m/s² 3 times each in 6 directions					
Ambient temperature	Operating: 0 to 40°C, Storage: -15 to 60°C (with no icing or condensation)					
Ambient humidity	Operating/storage: 35% to 85% (with no condensation)					
Ambient atmosphere	No corrosive gases.					
Degree of protection	IEC60259 IP20					
Weight	Approx. 25 g		Approx. 30 g		Approx. 70 g	Approx. 80 g
Materials	Case and Lens: PC, Cable: Heat resistant polyvinyl chloride, Connector: Thermoplastic resin with glass					
LED safety	Risk Group 2 (IEC 62471)					
Accessories	Instruction sheet					

The color of white LEDs can vary due to intrinsic characteristics.
Confirm suitability for the application in advance.

Direct Ring Light FL-DR Series

Dimensions

(Unit:mm)

A FL-DR32W(-H)

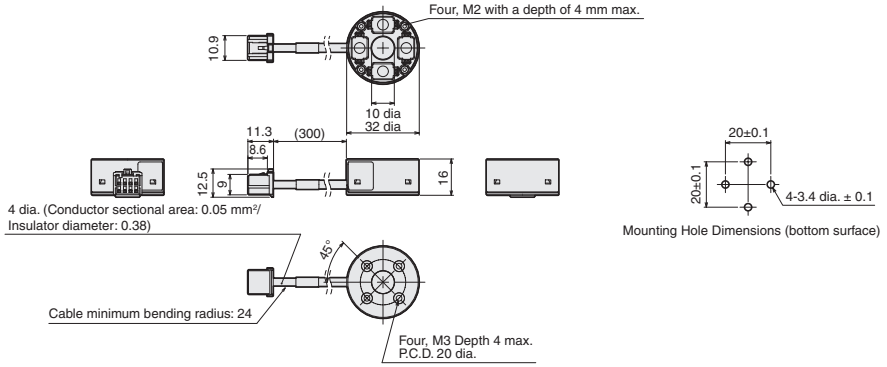

B FL-DR50W(-H)

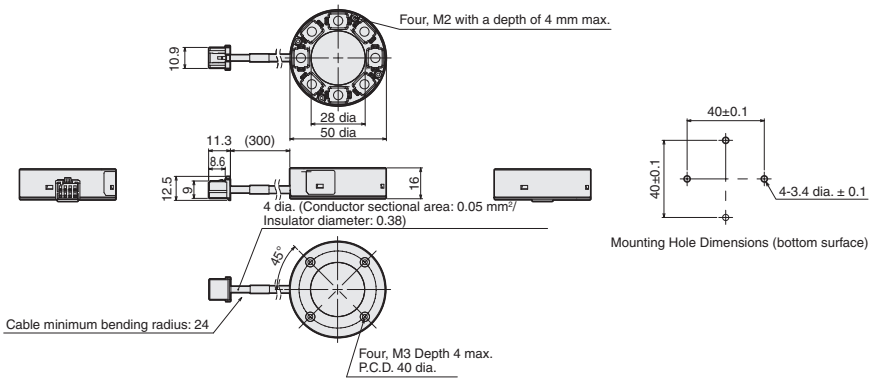

C FL-DR90W(-H)

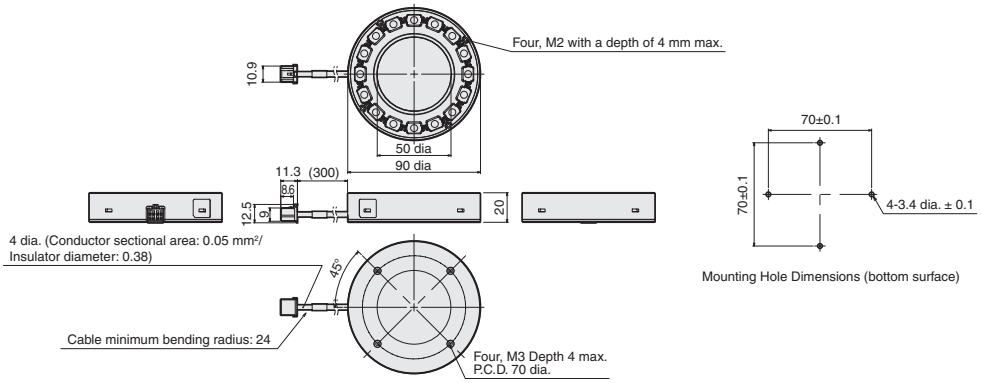

Camera-mount Lighting Controller for FL Series

FL-TCC Series

Camera-mount Compact Lighting Controller Which Requires No Power Supply Nor Lighting Control

Product Features

- No separate power supply is required because the power is supplied from the Camera.
- Light is emitted when a trigger signal is received from the Camera.
- Simple connection between the Camera and the Lighting with a single cable.

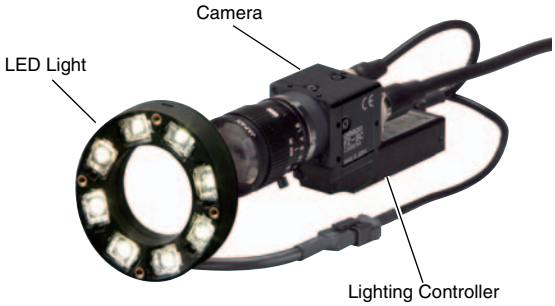

Ordering Information

Item	Model	Weight
Lighting Controller	**FL-TCC1**	Approx. 110 g
Camera Mounting Spacer	**FL-TCC1-XSP**	Approx. 10 g
Camera Mounting Attachment	**FL-TCC1-XAT**	Approx. 20 g

Camera-mount Lighting Controller for FL Series FL-TCC Series

Specifications

●Lighting Controller

Product type		Lighting Controller
Model		FL-TCC1
Input voltage		Supplied from applicable camera.
Applicable camera		FH-S/SC/S02/SC02/S04/SC04, FZ-S/SC/S2M/SC2M/S5M2/SC5M2/SH/SHC/SF/SFC/SP/SPC, FQ-MS series and others.
Applicable controller		FH series, FZ5 series, FZ4 series and others.
Power consumption		10 W, 0.9 A max. (including the lighting section)
Number of output channels		1
Applicable light		FL-☐ series
Luminance control method	Functions	PWM frequency: 100 kHz, Light adjustment: 255 levels (set with the Controller)
	Trigger lighting	Lighting ON synchronized with trigger input timing from the Controller. (Auto setting in accordance with the shutter speed.)
	Trigger lighting delay time	Ton: 30 µs max. (Trigger ready µs) Toff: 10 µs max.
External interface		Dedicated communication connector
Ambient temperature		Operating: 0 to 50°C, Storage: -15 to 60°C (with no icing or condensation)
Ambient humidity		Operating/storage: 35% to 85% (with no condensation)
Vibration resistance		10 to 55 Hz, (0.7 mm double amplitude) 80 min each in X, Y, and Z directions
Shock resistance		150 m/s² 3 times each in 6 directions (up/down, left/right, forward/backward)
Materials		Case: SECC, Cable: PVC
Degree of protection		IP20 (IEC60529)
Weight		Approx. 110 g
Accessories		Instruction sheet, Insulation sheet, Mounting screw (M2 × 6 mm) × 4
Applicable standards		EN61326-1 *, KC

* Electromagnetic environment: Industrial electromagnetic environment (EN/IEC 61326-1 Table 2)
Also, the following condition is applied to the immunity test of this product.
There are case that Lighting brightness fluctuate Max 10%.

Dimensions

(Unit:mm)

●Lighting Controller FL-TCC1

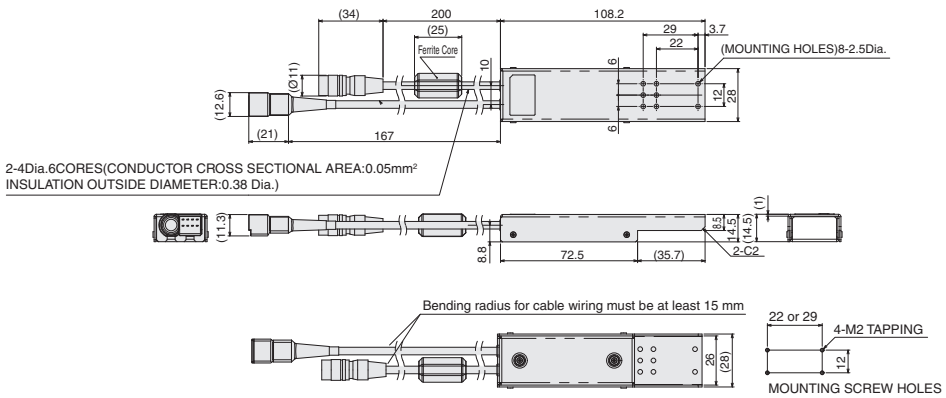

●Options

Camera Mounting Spacer
FL-TCC1-XSP (sold separately)

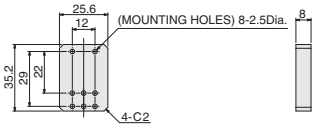

Camera Mounting Attachment
FL-TCC1-XAT (sold separately)

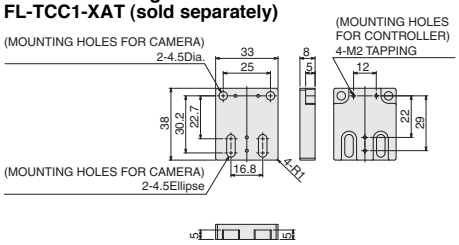

Digital Lighting Controller for FL Series
FL-STC Series

Small body is combined with the long cable at 25 m. Install in essentially any location.

Two-channel models

One-channel models

Product Features

●Easy Control and Adjustment of the Lighting

With a compact design small enough to fit in the palm of your hand, the Controller can be built into the control panel or in the gap between production lines.
By using the longest lighting cable in the industry (25 m), the Controller can be installed along with the image processing monitor in a variety of locations. It is possible to adjust the lighting while looking at the screen.

Connect to a Remote Control Panel

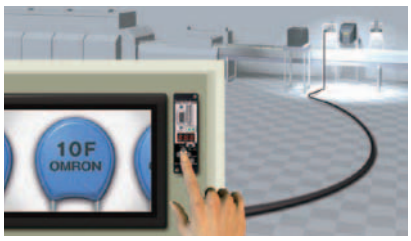

Mount to a DIN Rail underneath the Line or in the Gap between Tables

Lighting Control without Programming

This enables light emission synchronized with the camera using essentially any trigger, such as a photoelectric sensor.
The Controller can be connected to an image processing device to control lighting without any programming on a PLC.

[Control Output]
- PNP/NPN models
- Power source: 24 V

[Lighting Emission Controls]
- Lighting triggers can be used individually for each channel.
- Lighting delay and lighting time can be controlled.

Intuitive Digital Light Controls

Digital adjustment of light emission makes it easy to reproduce the lighting environment after line switchovers.

The quantity of light is displayed digitally in 400 levels. Adjust the light in fine detail.

▲ Increases brightness

▼ Decreases brightness

Digital Lighting Controller for FL Series FL-STC Series

Ordering Information

Type	Model	I/O specification	Input voltage
One-channel models	**FL-STC10**	NPN	24 VDC
	FL-STC15	PNP	
Two-channel models	**FL-STC20**	NPN	
	FL-STC25	PNP	

Specifications

Product type		**One-channel models**		**Two-channel models**	
I/O type		**NPN**	**PNP**	**NPN**	**PNP**
Model		**FL-STC10**	**FL-STC15**	**FL-STC20**	**FL-STC25**
Power supply voltage		24 VDC±10% (including ripple)			
Power consumption		36 W, 1.5 A max. (including the lighting section)		72 W, 3 A max. (including the lighting section)	
Number of output channels		1		2	
Applicable light		FL-□ Series			
Luminance control method	**CONTINUOUS mode**	While the Strobe Controller power source is ON, light is continuously emitted. PWM frequency: 100 kHz, Light adjustment: 400 levels			
	EXTERNAL TRIGGER mode	Lighting in synchronization with an external trigger input. Lighting duration: Continuous while the trigger is input, or 0.1 to 99.9 ms (set in 0.1-ms increments) PWM frequency: 100 kHz, Light adjustment: 400 levels			
	STOROBE mode	Lighting in synchronization with the external trigger input, but twice brighter than EXTERNAL TRIGGER mode. Lighting pulse width: 0.01 to 5 ms (light adjustment: 500 levels equivalent)			
Luminance adjustment	**Key**	Luminance control method and adjustment value: Slide switch and cross key setting			
	I/O	Luminance adjustment value: 9-bit binary input control			
External interface		Parallel I/O connector (D-sub 15-pin), Terminal block (external trigger input with 2 terminals, power source voltage input with 2 terminals)			
Ambient temperature		Operating: 0 to 40°C, Storage: -15 to 60°C (with no icing or condensation)			
Ambient humidity		Operating/storage: 35% to 85% (with no condensation)			
Vibration resistance		10 to 150 Hz (0.7 mm double amplitude), 80 min each in X, Y, and Z directions			
Shock resistance		150 m/s² 3 times each in 6 direction (up/down, left/right, forward/backward)			
Materials		Case: PC			
Degree of protection		IEC60529 IP20			
Weight		Approx. 100 g			
Accessories		Instruction sheet,Terminal block connector			
Applicable standards		EN61326-1 *, KC			

* Electromagnetic environment: Industrial electromagnetic environment (EN/IEC 61326-1 Table 2)
Also, the following condition is applied to the immunity test of this product.
There are case that Lighting brightness fluctuate Max 10%.

Dimensions

(Unit:mm)

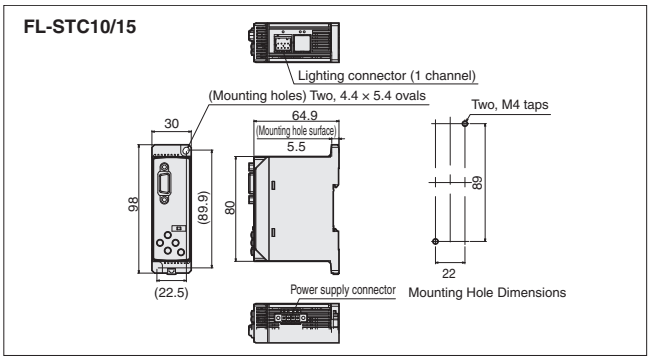

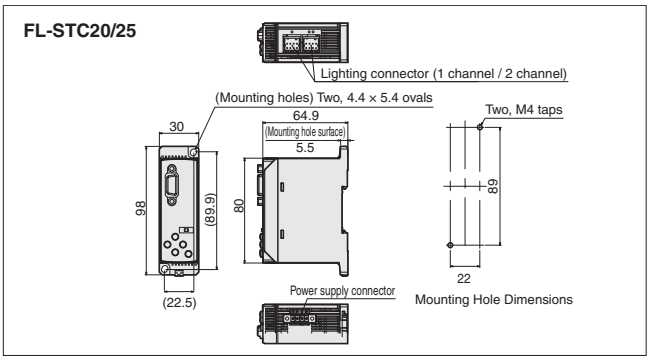

I/O Circuit Diagrams

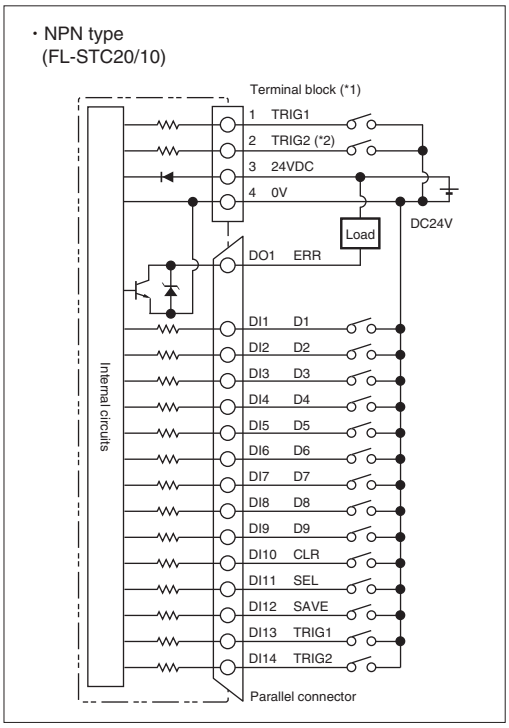

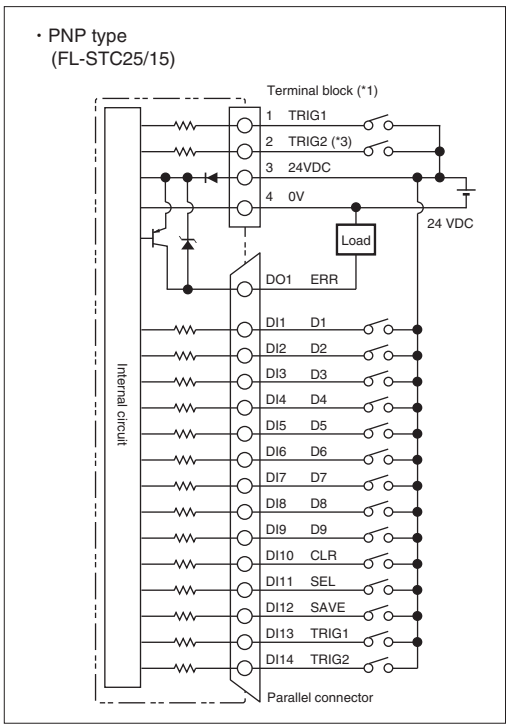

*1. To wire the terminal block, connect a applicable cord (AWG16-22 with a 5 mm margin for work).
*2. No use for FL-STC10
*3. No use for FL-STC15

●Electrical Specifications

Output circuit	Input circuit
NPN Open-collector 30 VDC 50 mA max. ON: Residual voltage 1.2 V max. OFF: Leakage current 0.1 mA max.	ON: Short-circuited with 0 V or 1.5 V or less OFF: Open (Leakage current: 0.1 mA max.)

●Electrical Specifications

Output circuit	Input circuit
PNP Open-collector 50 mA max. ON: Residual voltage 1.2 V max. OFF: Leakage current 0.1 mA max.	ON: Supply voltage short-circuited or supply voltage within 1.5 v OFF: Open (Leakage current: 0.1 mA max.)

Wiring Diagram

PIN Location

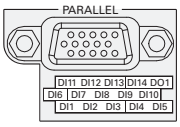

PIN No.	Signal	I/O	Function	
DI1	D1	Input	Data 1bit (low)	1) CONT/TRIG mode Set Luminance value by D9 . D1, 9bit binary data. Range 1 . 400 (binary 000000001 . 110010000) 2) STB mode Set Strobe Lighting time by D9 . D1, 9bit binary data. Range 0.01 . 5.00ms (1 . 500 binary 000000001 . 111110100) Each bit 1=ON, 0=OFF
DI2	D2	Input	Data 2bit	
DI3	D3	Input	Data 3bit	
DI4	D4	Input	Data 4bit	
DI5	D5	Input	Data 5bit	
DI6	D6	Input	Data 6bit	
DI7	D7	Input	Data 7bit	
DI8	D8	Input	Data 8bit	
DI9	D9	Input	Data 9bit (High)	
DI10	CLR	Input	Error clear. (OFF→ON timing)	
DI11	SEL	Input	Select setting CH. OFF=1CH, ON=2CH	
DI12	SAVE	Input	Save data D9 - D1 to memory at the timing of “save” OFF→ON *3)	
DI13	TRIG1	Input	CH1 Trigger Input (*1)(*2)	
DI14	TRIG2	Input	CH2 Trigger Input (*1)(*2)	
DO1	ERR	Output	ON at the Error happens	

*1. Pin 1 and 2 of terminal block have lighting trigger. Make sure isolate another trigger terminal when you use one trigger terminal.
*2. Prevent from chattering, otherwise the lighting timing would be missed.
*3. Memory function “ON”: The data stored in FLASH memory.
Memory function “OFF” : The data stored in RAM memory.

Lighting Controller for Photometric Stereo Lights
FL-TCC1PS Series

Lighting controller for photometric stereo lights.

Product Features

- No need to control light emission timing.
- Simple wiring from a vision system controller.
- Light intensity and luminance control are set through the vision system controller.

Specifications

Model	FL-TCC1PS
Applicable vision system controller	FH series (Ver.6.00 or higher)
Applicable camera	FH-S series, FZ-S series
Applicable light	FL-PS series
Number of channels	1
Power supply voltage *	24 VDC±10% (including ripple)
Recommended power supply	S8VK-G12024 (manufactured by OMRON, 24 VDC, 5 A 120 W)
Current consumption	3.0 A max.
Drive method	Constant voltage method
Luminance control method	Duty light adjustment: light adjustment of 255 levels (configured with vision system controller)
Trigger lighting	Lighting in synchronization with trigger input timing from the controller (configured with vision system controller).
Lighting duration setting	Auto setting in accordance with shutter speed.
Lighting time control	Set with vision system controller or set in accordance with shutter speed.
External interface	Camera connection cable (directly connected with the main unit) 400 mm Lighting connection cable (directly connected with the main unit) 400 mm
Ambient temperature	Operating: 0 to 40°C Storage: -15 to +60°C (with no icing nor no condensation)
Ambient humidity	Operating and storage: 35% to 85% (with no condensation)
Degree of protection	IP20 (IEC60529)
Vibration resistance	10 to 150 Hz, (0.35mm half-amplitude) 80 min. each in X, Y, and Z directions
Shock resistance	150 m/s² 3 times each in 6 directions (up/down, left/right, forward/backward)
Material	Case: Alminum, Cable: PVC, Camera Mount Plate: POM
Weight	Approx. 200 g
Accessories	Instruction Sheet (this Sheet), 24 V power supply terminal block (male), camera mount plate, Compliance Sheet, mounting screws (M2 set screw x 4, M2 flat head screw x 4, M4 flat head screw x 4)

Note: 1. When supplying the power to this lighting controller, make sure to turn ON the power to this lighting controller first or at the same time with the vision system controller.
2. When FL-PS260W is used in the length of the power supply line at least 15m, adjust the power voltage to become 24-26.4 V.
3. This lighting complied with the EN standard (EN61326-1)
(Electromagnetic environment : Industrial electromagnetic environment (EN/IEC 61326-1 Table 2))
Also, the following condition is applied to the immunity test of this product.
There are case that Lighting brightness fluctuate Max 10%.
4. This light complies with the KC standard.

Ordering Information

Model
FL-TCC1PS

Dimensions

(Unit:mm)

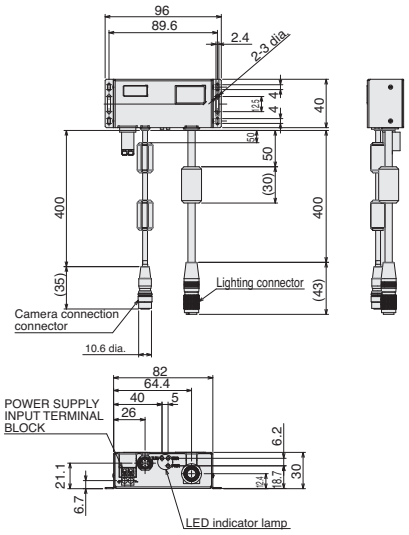

Tightening torque (M2 screw): 0.15 N•m

Camera mount plate (provided)

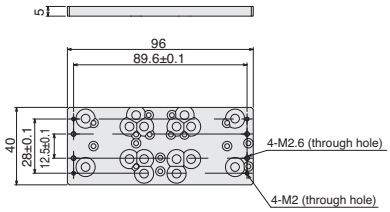

Cable/Diffusion Plate/Mounting Bracket

Cable

Ordering Information

Type	Cable Type	Model	Cable Length	Weight (g)	Drawing
For high-brightness LED lights	Extension Cable, Standard Cable 	**FL-XC1**	1	Approx. 50	A
		FL-XC2	2	Approx. 80	
		FL-XC3	3	Approx. 120	
		FL-XC5	5	Approx. 190	
		FL-XC10	10	Approx. 400	
		FL-XC25	25	Approx. 1000	
	Extension Cable, Bend resistant Cable 	**FL-XC1R**	1	Approx. 60	A
		FL-XC2R	2	Approx. 100	
		FL-XC3R	3	Approx. 150	
		FL-XC5R	5	Approx. 240	
		FL-XC10R	10	Approx. 500	
		FL-XC25R	25	Approx. 1200	
	Parallel Cable	**FL-XCP2**	2	Approx. 180	B
For photometric stereo lights	Extension Cable between Light and Lighting Controller 	**FL-XC05PS**	0.5	Approx. 100	C
		FL-XC1PS	1	Approx. 150	

Dimensions

(Unit:mm)

A Extension Cable for High-brightness LED Lights

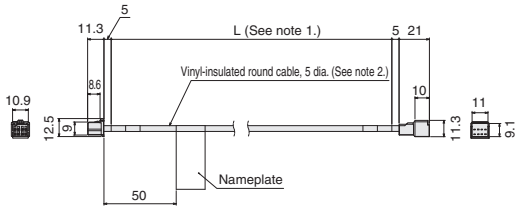

Note 1. Depends on the cable length.
Note 2. The cable diameter is 6.2 for bend resistant cable.

B Parallel Cable for High-brightness LED Lights

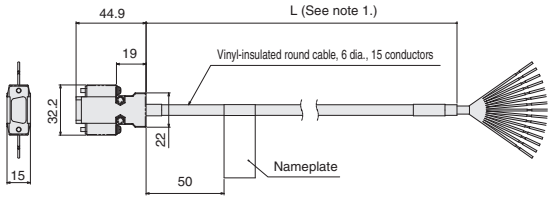

Note 1. Depends on the cable length.

C Extension Cable for Photometric Stereo Lights

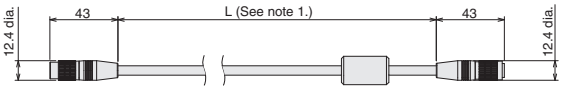

Note 1. Depends on the cable length.

Diffusion Plate

Ordering Information

●Diffusion Plate

Type	Model	Dimensions (mm)
Bar Lighting	FL-BR5020DF	49.8×18×4
	FL-BR9120DF	90.6×18×4
	FL-BR13120DF	131.4×18×4

Type	Model	Outer diameter/Inner diameter/ Thickness (mm)
Direct Ring Lighting	FL-DR32DF	32 dia./10 dia./4
	FL-DR50DF	50 dia./28 dia./4
	FL-DR90DF	90 dia./50 dia./4

●Polarization Plate

Type	Model	Outer diameter/Inner diameter/ Thickness (mm)
Direct Ring Lighting	FL-DR32PL	32 dia./10 dia./2
	FL-DR50PL	50 dia./28 dia./2
	FL-DR90PL	90 dia./50 dia./2

Mounting Bracket

Ordering Information

Type	Model
Bar Lighting *	FL-XBK1

* One set includes two pieces.
Four mounting screws (M3 × 6 mm) are also included.

Dimensions

(Unit:mm)

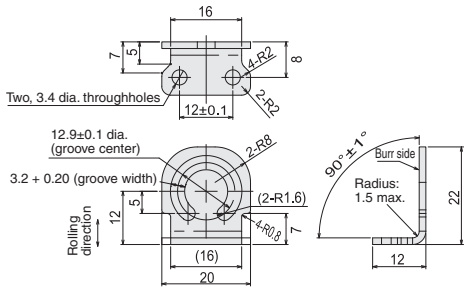

Bracket material: SUS

Burrs must extend less than 0.1 mm.

LED Characteristics

LED Safety

The LEDs that are used in the Light are classified as follows according to IEC 62471.

Series	Shape	Model	Color	LED Safety	Indication
FLV Series	Direct Ring Light	**FLV-DR□**	White, Blue	Risk Group 2	B
	Direct Ring Light	**FLV-DR□**	Red, Ultraviolet	Risk Group 1	D
	Direct Ring Light	**FLV-DR□IR**	Infrared	Risk Group 1	C
	Low Angle Ring Light	**FLV-DL□**	White, Red, Blue	Risk Group 1	D
	Bar Light	**FLV-BR□**	White, Blue	Risk Group 2	B
	Bar Light	**FLV-BR□**	Red, Ultraviolet	Risk Group 1	D
	Bar Light	**FLV-BR□IR**	Infrared	Risk Group 1	C
	Coaxial Light	**FLV-CL□**	White, Red, Blue, Ultraviolet	Risk Group 1	D
	Coaxial Light	**FLV-CL□IR**	Infrared	Risk Group 1	C
	Shadowless Light	**FLV-FS□**	White, Red, Blue	Risk Group 1	D
	Shadowless Light	**FLV-FR□**	White, Red, Blue	Risk Group 1	D
	Shadowless Light	**FLV-FP□**	White, Red, Blue	Risk Group 1	D
	Shadowless Light	**FLV-FQ□**	White, Red, Blue	Risk Group 1	D
	Direct Back Light	**FLV-DB□**	White, Red, Blue	Risk Group 1	D
	Edge Type Light	**FLV-FB□**	White, Red, Blue	Risk Group 1	D
	Edge Type Coaxial Light	**FLV-FX□**	White, Red, Blue	Risk Group 1	D
	Dome Light	**FLV-DD□**	White, Red, Blue	Risk Group 1	D
	High-power Spot Light	**FLV-EP50□**	White, Red	Risk Group 1	D
	Spot Light	**FLV-EP08□**	White, Red, Blue	Risk Group 1	D
	Line Light	**FLV-LN□W**	White	Risk Group 3	A
	Line Light	**FLV-LN□R**	Red	Risk Group 1	D
	Line Light	**FLV-LN□B**	Blue	Risk Group 2	B
FL Series	MDMC Light	**FL-MD180MC**	White, Blue, Green	Risk Group 2	B
	MDMC Light	**FL-MD180MC**	Red	Risk Group 1	D
	MDMC Light	**FL-MD90MC**	White, Blue	Risk Group 2	B
	MDMC Light	**FL-MD90MC**	Red, Green	Risk Group 1	D
	Photometric Stereo Light	**FL-PS□W**	White	Risk Group 2	B
	Direct Ring Light	**FL-DR□**	White	Risk Group 2	B
	Bar Light	**FL-BR□**	White	Risk Group 2	B

A

WARNING
Possibly hazardous optical radiation emitted from this product
Risk Group 3 IEC 62471

B

CAUTION
Possibly hazardous optical radiation emitted from this product
Risk Group 2 IEC 62471

C

NOTICE
IR emitted from this product
Risk Group 1 IEC 62471

D

Risk Group 1 IEC 62471

Typical LED Spectral Distributions

Typical spectral distributions and peak wavelengths of each LED color are shown in the diagrams below.

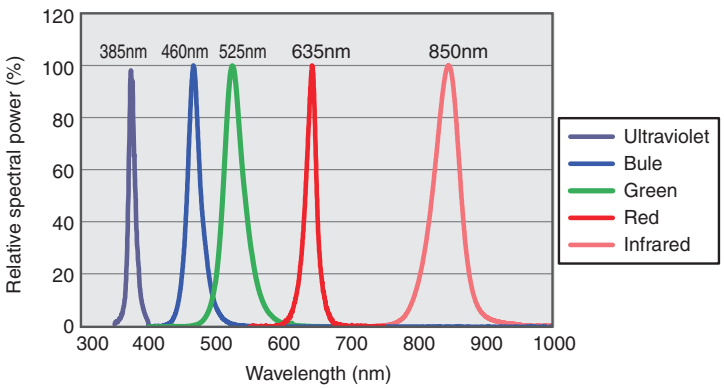

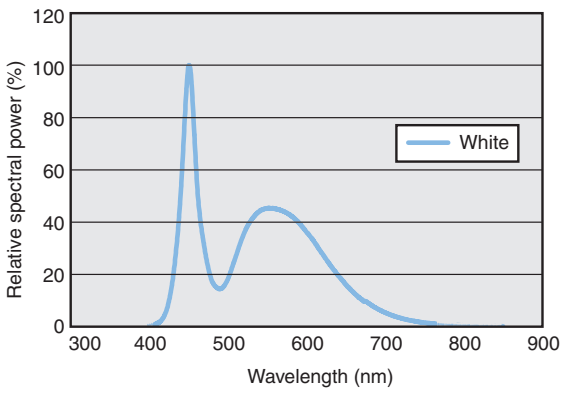

Lens Selection

FH/FZ-series Vision System

Camera		Recommended lens		
		Standard Lens	Telecentric Lens	Vibrations and Shocks Resistant Lens
Resolution	Model	Lens for general inspection. Ideal for when a wide field of view, a long working distance, or cost-effectiveness is required.	Lens ideal for high-precision inspection and alignment. Images can be captured at high magnification, and distortion at edges of images is low.	Robust lens with improved resistance to vibrations and shocks is ideal for industrial use. Design without lock screws enables installation in narrow positions.
0.3 million pixels	FZ-SP/SPC/SF/SFC	FZ-LES Series Product details: **Page 71** Optical chart: **Page 92**	VS-TCH Series Product details: **Page 76**	VS-MCA Series Product details: **Page 80** Optical chart: **Page 95** VS-MC Series Product details: **Page 83**
	FZ-S□	SV-V Series Product details: **Page 72** Optical chart: **Page 92**		
	FZ-SH□			
	FH-S□			
0.4 million pixels	FH-SM□			
2 million pixels	FZ-S□2M	SV-H Series Product details: **Page 73** Optical chart: **Page 93**		
	FH-S□02	VS-H1 Series Product details: **Page 73** Optical chart: **Page 93**	VS-TEV Series Product details: **Page 79**	VS-MCH1 Series Product details: **Page 84** Optical chart: **Page 95**
4 million pixels	FH-S□04			
5 million pixels	FH-S□05R	SV-H Series Product details: **Page 73** Optical chart: **Page 93**	VS-TCH Series Product details: **Page 76**	VS-MCA Series Product details: **Page 80** Optical chart: **Page 96** VS-MC Series Product details: **Page 83**
	FZ-S□5M3			
	FH-S□X05			
12 million pixels	FH-S□X12	VS-LDD Series Product details: **Page 74** Optical chart: **Page 94**	VS-TEV Series Product details: **Page 79**	—
	FH-S□12	VS-L/M42-10 Series Product details: **Page 75** Optical chart: **Page 94**	—	VS-MCL/M42-10 Series Product details: **Page 88** Optical chart: **Page 97**
20.4 million pixels	FH-S□21R	VS-LDD Series Product details: **Page 74** Optical chart: **Page 94**	VS-TEV Series Product details: **Page 79**	VS-MCH1 Series Product details: **Page 84** Optical chart: **Page 97**

FHV7-series Smart Camera

Camera		Recommended lens		
		Standard Lens	Telecentric Lens	Vibrations and Shocks Resistant Lens
Resolution	Model	Lens for general inspection. Ideal for when a wide field of view, a long working distance, or cost-effectiveness is required.	Lens ideal for high-precision inspection and alignment. Images can be captured at high magnification, and distortion at edges of images is low.	Robust lens with improved resistance to vibrations and shocks is ideal for industrial use. Design without lock screws enables installation in narrow positions.
0.4 million pixels	FHV7H-□004-C	SV-V Series Product details: **Page 72** Optical chart: **Page 98**	VS-TCH Series Product details: **Page 76**	VS-MCA Series Product details: **Page80** Optical chart: **Page 99** VS-MC Series Product details: **Page 83**
1.6 million pixels	FHV7H-□016-C			
3.2 million pixels	FHV7H-□032-C	SV-H Series Product details: **Page73** Optical chart: **Page 98**		
5 million pixels	FHV7H-□050-C			
6.3 million pixels	FHV7H-□063R-C			
12 million pixels	FHV7H-□120R-C			

Lens for FZ-series Small Cameras
FZ-LES Series

- Product lineup includes two types of small camera lenses, a pen type with a 12-mm diameter and a flat type with a 17-mm thickness.

Ordering Information

Recommended cameras	Model	Focal length (mm)	Aperture (F No.)
FZ-SF□ FZ-SP□	**FZ-LES3**	3	2.0 to 16
	FZ-LES6	6	2.0 to 16
	FZ-LES16	16	3.4 to 16
	FZ-LES30	30	3.4 to 16

Dimensions

(Unit:mm)

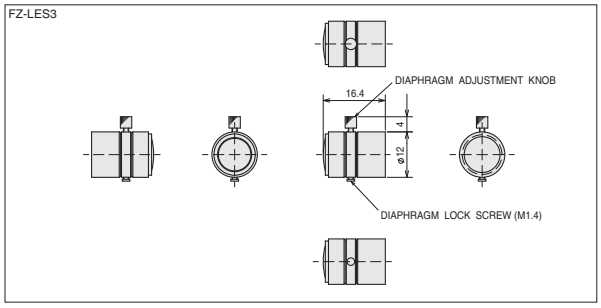

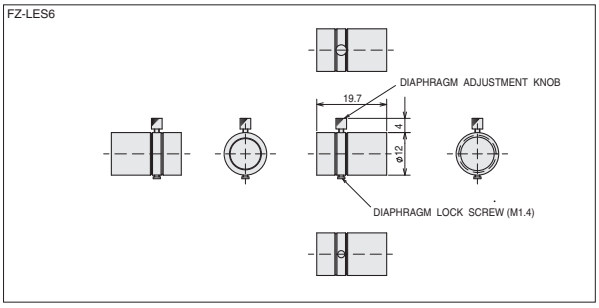

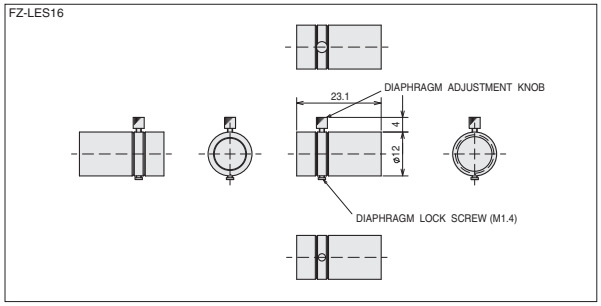

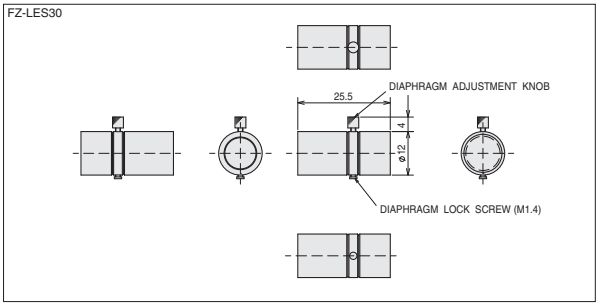

Specifications

Ambient temperature	Operating: -10 to 50°C, Storage: -20 to 70°C (with no icing or condensation)
Ambient humidity	Operating: 0% to 90%, Storage: 0% to 70% (with no condensation)

Optical Chart

Refer to page 92.

Lens for C-mount Cameras
SV-V Series

- Standard CCTV lens.
- Lineup of 11 models with focal lengths ranging from 3.5 to 100 mm.
- Lock screws for focus and iris.
- More robust structure designed for machine vision.
- Lower distortion and higher resolution than previous CCTV lenses.

Ordering Information

Recommended camera	Model	Dimensions	Focal distance (mm)	Aperture (F No)	Field of view (V × H)	Closest distance (mm)	Filter size	Weight (g)	Total length (mm)	Maximum compatible CCD
FZ-S□ FZ-SH□ FH-S□ FH-S□X FHV7H-□ *	**3Z4S-LE SV-03514V**	A	3.5	1.4 to Close	77.8°×105.9°	200	-	53	30.4	1/3 inch
	3Z4S-LE SV-04514V	B	4.5	1.4 to Close	59.7°×79.9°	200	-	53	29.5	1/3 inch
	3Z4S-LE SV-0614V	C	6	1.4 to Close	42.3°×54.6°	200	M27.0 P0.5	49	30	1/3 inch
	3Z4S-LE SV-0813V	D	8	1.3 to Close	44.6°×57.3°	200	M25.5 P0.5	55	34	1/3 inch
	3Z4S-LE SV-1214V	E	12	1.4 to Close	21.9°×38.9°	300	M27.0 P0.5	44	29.5	1/3 inch
	3Z4S-LE SV-1614V	F	16	1.4 to Close	22.8°×30.1°	400	M27.0 P0.5	34	24	1/3 inch
	3Z4S-LE SV-2514V	G	25	1.4 to Close	14.9°×19.8°	500	M27.0 P0.5	36	24.5	1/3 inch
	3Z4S-LE SV-3518V	H	35	1.8 to Close	10.8°×14.4°	300	M27.0 P0.5	47	33.5 to 37.5	1/3 inch
	3Z4S-LE SV-5018V	I	50	1.8 to Close	7.9°×10.5°	1000	M30.5 P0.5	67	37.0 to 39.4	1/3 inch
	3Z4S-LE SV-7527V	J	75	2.7 to Close	3.6°×4.8°	1000	M30.5 P0.5	76	42.0 to 44.4	1/3 inch
	3Z4S-LE SV-10035V	K	100	3.5 to Close	2.9°×3.8°	1000	M30.5 P0.5	79	43.9 to 6.3	1/3 inch

*The SV-V Series can be used with the FHV7 Smart Camera with 0.4 or 1.6 million pixels.

Dimensions

(Unit:mm)

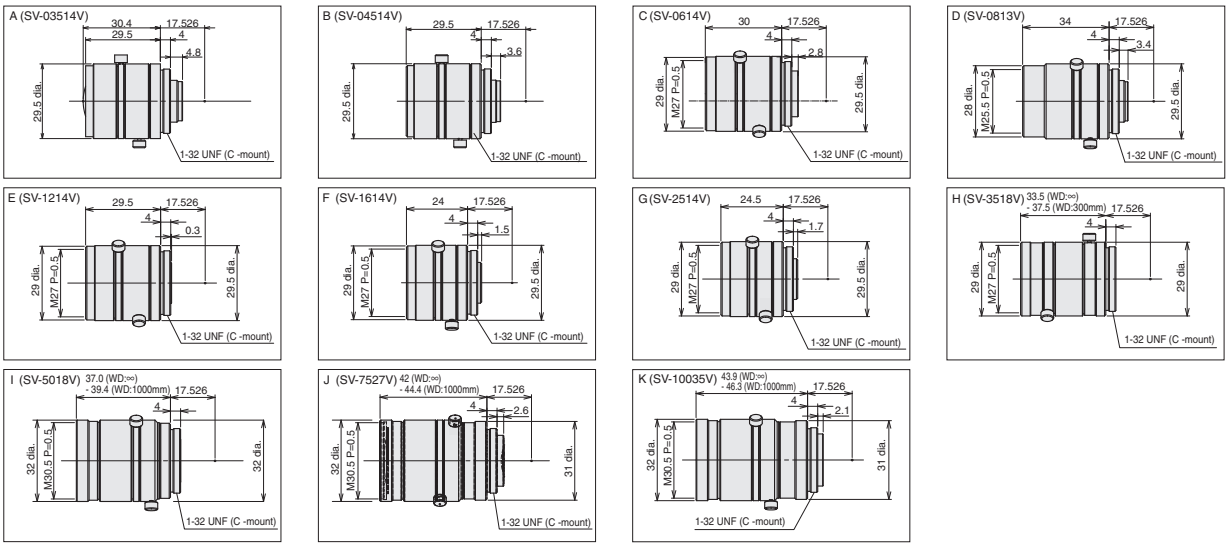

Specifications

Mounting	C mount
Ambient temperature	Operating: 0 to 50°C, Storage: -10 to 60°C (with no icing or condensation)
Ambient humidity	Operating: 35% to 80%, Storage: 35% to 90% (with no condensation)

Optical Chart

Refer to page 92 and 98.

High-resolution Lens for C-mount Cameras

SV-H/VS-H1 Series

- High-resolution lens for megapixel camera.
- Lineup of 7 models for 2/3-inch cameras, with focal lengths ranging from 6 to 100 mm, and 9 models for 1-inch cameras.
- Lock screws for focus and iris.
- Short expose time with bright F number of 1.4 for high-speed CMOS cameras.
- Compact design but minimized decrease in distortion and brightness.

SV-H Series for 2/3-inch image sensor

VS-H1 Series for 1-inch image sensor

Ordering Information

Recommended camera	Model	Dimensions	Focal distance (mm)	Aperture (F No)	Field of view (V × H)	Closest distance (mm)	Filter size	Weight (g)	Total length (mm)	Maximum compatible CCD
FZ-S□2M FZ-S□5M3 FH-S□05R FH-S□X05 FHV7H-□	**3Z4S-LE SV-0614H**	A	6	1.4 to 16	56.8°×71.5°	100	M40.5 P0.5	145	57.5	2/3 inch
	3Z4S-LE SV-0814H	B	8	1.4 to 16	44.9°×57.6°	100	M35.5 P0.5	125	52.5	2/3 inch
	3Z4S-LE SV-1214H	C	12	1.4 to 16	30.2°×39.6°	100	M27 P0.5	85	51	2/3 inch
	3Z4S-LE SV-1614H	D	16	1.4 to 16	23.1°×30.6°	100	M27 P0.5	85	47.5	2/3 inch
	3Z4S-LE SV-2514H	E	25	1.4 to 16	15.0°×20.0°	150	M27 P0.5	65	36	2/3 inch
	3Z4S-LE SV-3514H	F	35	1.4 to 16	10.8°×14.3°	200	M35.5 P0.5	150	45.5	2/3 inch
	3Z4S-LE SV-5014H	G	50	1.4 to 16	7.5°×10.0°	300	M40.5 P0.5	170	57.5	2/3 inch
	3Z4S-LE SV-7525H	H	75	2.5 to Close	8.6°×8.6° *	1200	M34.0 P0.5	85	49.5 to 54.6	1 inch
	3Z4S-LE SV-10028H	I	100	2.8 to Close	6.6°×6.6° *	2000	M37.5 P0.5	105	66.5 to 71.6	1 inch
FH-S□02 FH-S□04	**3Z4S-LE VS-0618H1**	J	6	1.8 to 16	87.3°×87.3°	100	NA	200	57.2	1 inch
	3Z4S-LE VS-0814H1	K	8	1.4 to 16	71.8°×71.8°	100	M55.0 P0.75	170	59	1 inch
	3Z4S-LE VS-1214H1	L	12	1.4 to 16	50.8°×50.8°	300	M35.5 P0.5	140	48 to 48.5	1 inch
	3Z4S-LE VS-1614H1N	M	16	1.4 to 16	38.6°×38.6°	300	M30.5 P0.5	120	45.0 to 45.9	1 inch
	3Z4S-LE VS-2514H1	N	25	1.4 to 16	25.1°×25.1°	300	M30.5 P0.5	90	33.5 to 35.6	1 inch
	3Z4S-LE VS-3514H	O	35	1.4 to 16	18.3°×18.3°	300	M30.5 P0.5	100	35.0 to 39.1	1 inch
	3Z4S-LE VS-5018H1	P	50	1.8 to 16	12.8°×12.8°	500	M40.5 P0.5	135	44.5 to 49.5	1 inch

*A field of view captured by a 1-inch CCD.
Note: The FH-S□02/FH-S□04 with a focal length of 75 mm or 100 mm can be used with the 3Z4S-LE SV-7525H or 3Z4S-LE SV-10028H, respectively.

Dimensions

(Unit:mm)

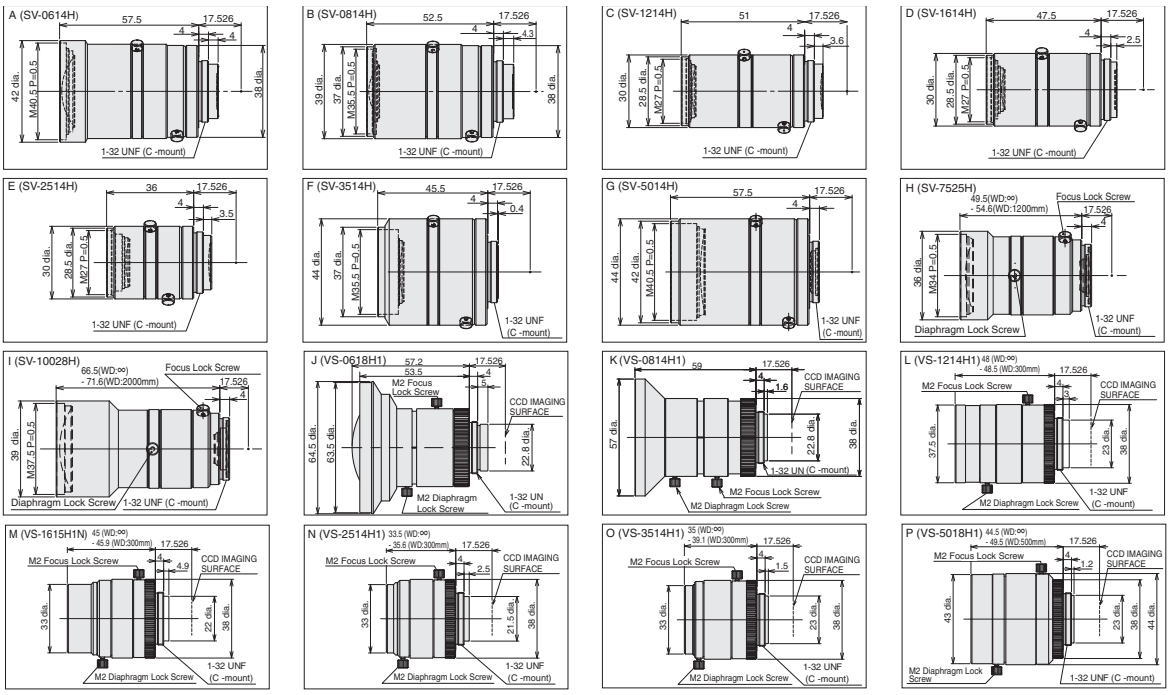

Specifications

Mounting	C mount
Ambient temperature	Operating: 0 to 50°C, Storage: -10 to 60°C (with no icing or condensation)
Ambient humidity	Operating: 35% to 80%, Storage: 35% to 90% (with no condensation)

Optical Chart

Refer to page 92, 93, 98 and 99.

Ultra-high-resolution Lens for C-mount Cameras
VS-LLD Series

- Ultra-high-resolution lens for 4/3-inch cameras.
- Lineup of 5 models with focal lengths ranging from 12.5 to 50 mm.
- Leverages the floating mechanism to enable image capture at all ranges.
- Lock screws for focus and iris.
- Low-distortion design to obtain images with high resolution to the edge.

Ordering Information

Recommended camera	Model	Dimensions	Focal distance (mm)	Aperture (F No)	Field of view (V × H)		Closest distance (mm)	Filter size	Weight (g)	Total length (mm)	Maximum compatible CCD
					FH-S□X12	FH-S□21R					
FH-S□X12 FH-S□21R	**3Z4S-LE VS-LLD12.5**	A	12.5	2.5 to 16	45.1°×58.8°	39.0°×56.0°	40.9	M62 P0.75	380	84.3 to 86.1	4/3 inches
	3Z4S-LE VS-LLD18	B	18	2.1 to 16	32.2°×42.8°	27.6°×40.6°	53.8	M43 P0.75	320	82.3 to 83.8	
	3Z4S-LE VS-LLD25	C	25	2.1 to 16	23.4°×31.5°	20.1°×29.8°	66.0	M43 P0.75	285	82.8 to 84.9	
	3Z4S-LE VS-LLD35	D	35	2.2 to 16	16.9°×22.8°	14.4°×21.5°	129.5	M46 P0.75	295	82.5	
	3Z4S-LE VS-LLD50	E	50	2.2 to 16	11.8°×16.1°	10.1°×15.2°	205.4	M46 P0.75	250	73.0	

Dimensions

(Unit:mm)

A (VS-LLD12.5)

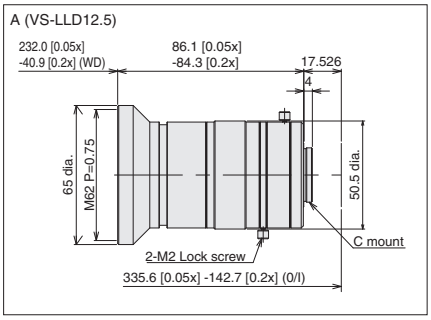

B (VS-LLD18)

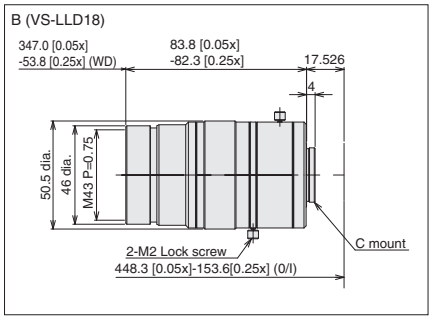

C (VS-LLD25)

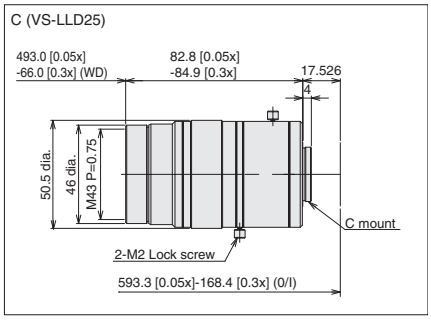

D (VS-LLD35)

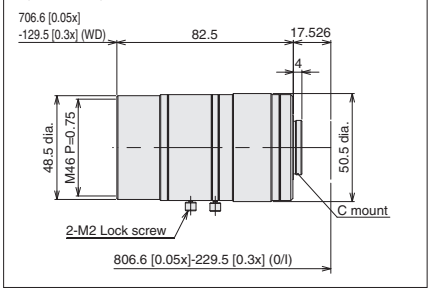

E (VS-LLD50)

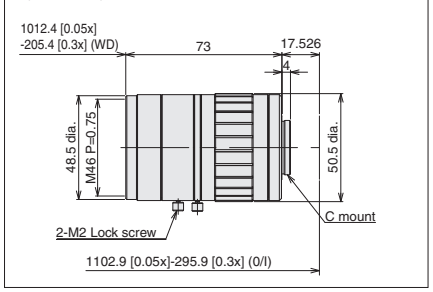

Specifications

Mounting	C mount
Ambient temperature	Operating:-5 to 50°C, Storage: -10 to 60°C (with no icing or condensation)
Ambient humidity	Operating: 0% to 80%, Storage: 0% to 90% (with no condensation)

Optical Chart

Refer to page 94.

Lens for M42-mount Cameras

VS-L/M42-10 Series

- Wide variety of lenses with focal lengths ranging from 18 to 100 mm.
- Hexagon socket head cap screws for focus and aperture lock screws can be tightened more than finger tight. This ensures vibration resistance even when large diameter lenses are used.

Ordering Information

Recommended camera	Model	Dimensions	Focal distance (mm)	Aperture (F No)	Optical magnification	Closest distance (mm)	Filter size	Weight (g)	Total length (mm)	Maximum compatible CCD
FH-S□12	**3Z4S-LE VS-L1828/M42-10**	A	18	2.8 to 16	0.025x to 0.12x	137.9	M55.0 P0.75	330	94	1.8 inches
	3Z4S-LE VS-L2526/M42-10	B	25	2.6 to 16	0.025x to 0.12x	198.1	M55.0 P0.75	240	80	1.8 inches
	3Z4S-LE VS-L3528/M42-10	C	35	2.8 to 16	0.05x to 0.3x	112.8	M62.0 P0.75	345	108	1.8 inches
	3Z4S-LE VS-L5028/M42-10	D	50	2.8 to 16	0.05x to 0.3x	181.4	M62.0 P0.75	285	94.5	1.8 inches
	3Z4S-LE VS-L8540/M42-10	E	85	4.0 to 16	0.1x to 0.35x	285.0	M52.0 P0.75	340	129.5	1.8 inches
	3Z4S-LE VS-L10028/M42-10	F	100	2.8 to 16	0.05x to 0.3x	409.0	M52.0 P0.75	350	134.5	1.8 inches

Note:Vibrations and Shocks Resistant Lenses for M42-mount cameras are also available. Ask your OMRON representative for details.

Dimensions

(Unit:mm)

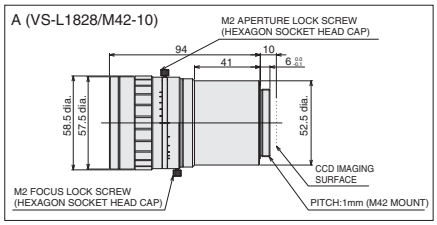

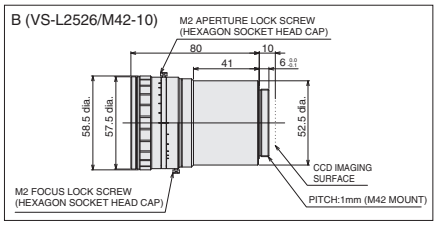

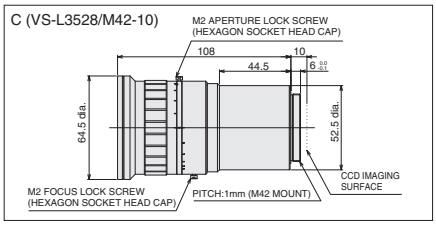

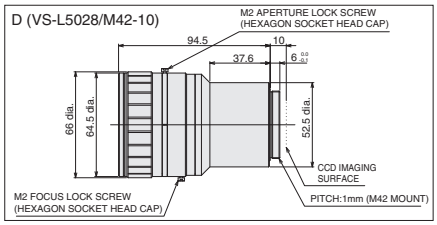

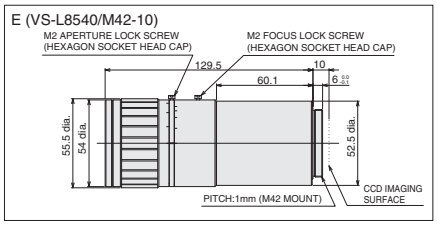

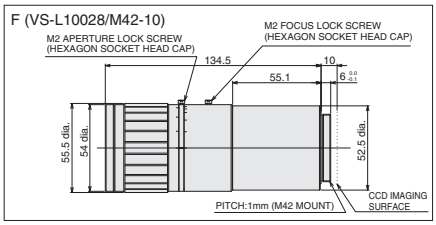

Specifications

Mounting	M42 mount
Ambient temperature	Operating: 0 to 50°C, Storage: -10 to 60°C (with no icing or condensation)
Ambient humidity	Operating: 35% to 80%, Storage: 35% to 90% (with no condensation)

Optical Chart

Refer to page 94.

High-resolution Telecentric Lens for C-mount Cameras
VS-TCH Series

- High-resolution telecentric lens for megapixel camera.
- Broad product selection.

  Available in two different working distances, 65 or 110 mm, to fit installation spaces.
  Comes in two shapes: straight and coaxial for coaxial lights.
  Five optical magnifications, 0.5x, 1.0x, 1.5x, 2.0x, and 4.0x, are available to cover a wide range of applications.
- Low-distortion design.

  High quality images can be obtained from any part of the area.
  Ideal for high-precision alignment.

Ordering Information

Recommended camera	Model	Dimensions	Optical magnification (±5%)	WD *1 (mm)	Effective FNO	Depth of field *2 (mm)	Resolution *3 (μm)	TV distortion	Shape	Weight (g)	Maximum compatible CCD
FZ-S□ FZ-SH□ FH-S□ FH-S□X FZ-S□2M FZ-S□5M3 FH-S□05R FH-S□X05 FHV7H-□	**3Z4S-LE VS-TCH05-65-O**	A	0.5x	75.3	9.42	3	12.43	0.02%	Straight	70	2/3 inch
	3Z4S-LE VS-TCH05-65CO-O	B							Coaxial	80	
	3Z4S-LE VS-TCH05-110-O	C		110.8	9.49	3.04	12.9	0.02%	Straight	100	
	3Z4S-LE VS-TCH05-110CO-O	D							Coaxial	110	
	3Z4S-LE VS-TCH1-65-O	E	1.0x	68.8	9.94	0.8	6.71	0.01%	Straight	70	
	3Z4S-LE VS-TCH1-65CO-O	F							Coaxial	80	
	3Z4S-LE VS-TCH1-110-O	G		110.3	10.49	0.84	6.99	0.02%	Straight	100	
	3Z4S-LE VS-TCH1-110CO-O	H							Coaxial	110	
	3Z4S-LE VS-TCH1.5-65-O	I	1.5x	65	11.8	0.4	5.24	0.01%	Straight	70	
	3Z4S-LE VS-TCH1.5-65CO-O	J							Coaxial	80	
	3Z4S-LE VS-TCH1.5-110-O	K		110.8	11.97	0.43	5.33	0.02%	Straight	90	
	3Z4S-LE VS-TCH1.5-110CO-O	L							Coaxial	105	
	3Z4S-LE VS-TCH2-65-O	M	2.0x	65	13.6	0.3	4.53	0.03%	Straight	70	
	3Z4S-LE VS-TCH2-65CO-O	N							Coaxial	80	
	3Z4S-LE VS-TCH2-110-O	O		110.8	13.5	0.27	4.53	0.03%	Straight	95	
	3Z4S-LE VS-TCH2-110CO-O	P							Coaxial	110	
	3Z4S-LE VS-TCH4-65-O	Q	4.0x	65	17.91	0.09	3	0.02%	Straight	90	
	3Z4S-LE VS-TCH4-65CO-O	R							Coaxial	100	
	3Z4S-LE VS-TCH4-110-O	S		110.8	22.2	0.11	3.73	0.03%	Straight	100	
	3Z4S-LE VS-TCH4-110CO-O	T							Coaxial	110	

*1. The working distance is the distance from the end of the lens to the workpiece.
*2. The depth of field is calculated using a permissible circle of confusion diameter of 0.04 mm.
*3. The resolution is calculated using a wavelength of 550 nm.
Note: 1. Fixing the lens or other reinforcement may be required depending on the installation angle or operating environment (vibration/shock). When fixing the lens, insulate the lens from the fixture.
2. The above specifications are values calculated from the optical design and can vary depending on installation conditions.

Camera and Field of View Table

Camera	Size of image element (inch)	Imaging area H × V (mm)	Field of view H × V (mm)				
			0.5 × (VS-TCH05)	1.0 × (VS-TCH1)	1.5 × (VS-TCH1.5)	2.0 × (VS-TCH2)	4.0 × (VS-TCH4)
FH-S□/FZ-S□/FZ-SH□	1/3" equivalent	4.8 × 3.6	9.6 × 7.2	4.8 × 3.6	3.2 × 2.4	2.4 × 1.8	1.2 × 0.9
FH-S□X	1/2.9" equivalent	5.0 × 3.8	10.0 × 7.6	5.0 × 3.8	3.3 × 2.5	2.5 × 1.9	1.3 × 1.0
FH-S□05R	1/2.5" equivalent	5.7 × 4.3	11.4 × 8.6	5.7 × 4.3	3.8 × 2.9	2.9 × 2.2	1.4 × 1.1
FZ-S□2M	1/1.8" equivalent	7.0 × 5.3	14.0 × 10.6	7.0 × 5.3	4.7 × 3.5	3.5 × 2.7	1.8 × 1.3
FH-S□X05/FZ-S□5M3	2/3" equivalent	8.4 × 7.1	16.8 × 14.2	8.4 × 7.1	5.6 × 4.7	4.2 × 3.6	2.1 × 1.8
FHV7H-□004-C	1/2.9" equivalent	5.0×3.8	10.0×7.6	5.0×3.8	3.3×2.5	2.5×1.9	1.3×1.0
FHV7H-□016-C	1/2.9" equivalent	5.0×3.8	10.0×7.6	5.0×3.8	3.3×2.5	2.5×1.9	1.3×1.0
FHV7H-□032-C	1/1.8" equivalent	7.1×5.3	14.2×10.6	7.1×5.3	4.7×3.5	3.6×2.7	1.8×1.3
FHV7H-□050-C	2/3" equivalent	8.5×7.1	17.0×14.2	8.5×7.1	5.7×4.7	4.3×3.6	2.1×1.8
FHV7H-□063R-C	1/1.8" equivalent	7.4×5.0	14.8×10.0	7.4×5.0	4.9×3.3	3.7×2.5	1.9×1.3
FHV7H-□120R-C	1/1.7" equivalent	7.4×5.6	14.8×11.2	7.4×5.6	4.9×3.3	3.7×2.8	1.9×1.4

Note: The field of view is a calculated value and not a guaranteed value.

Applications

Detection of alignment marks

Combining the FLV-EP08-series Spot Light and Camera-mount Lighting Controller saves space and simplifies wiring.

Illustration of Combination of Spot Light and Controller

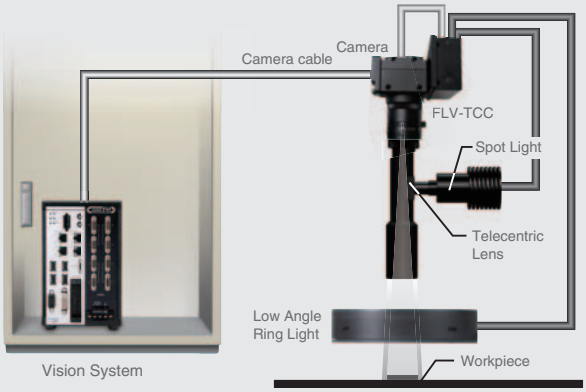

Only the camera cable is connected from control panel

Illustration of Alignment Mark Detection

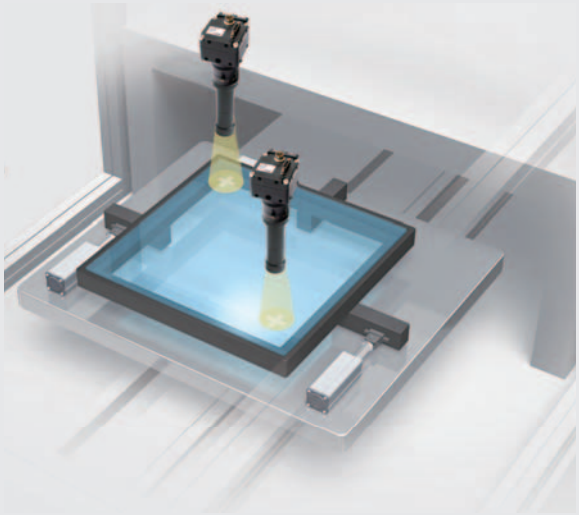

Dimensions

(Unit: mm)

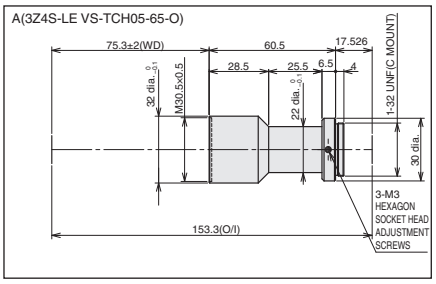

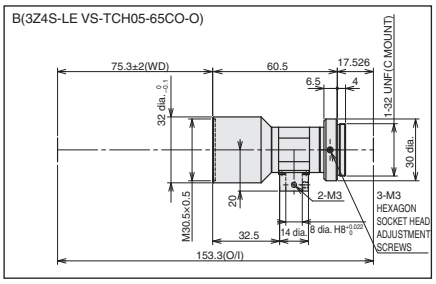

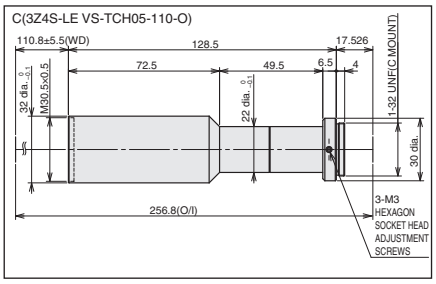

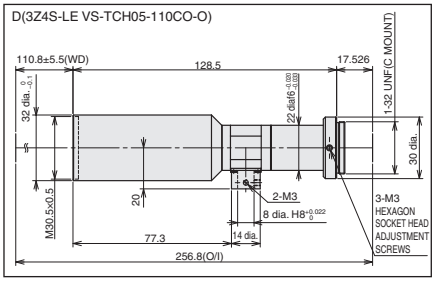

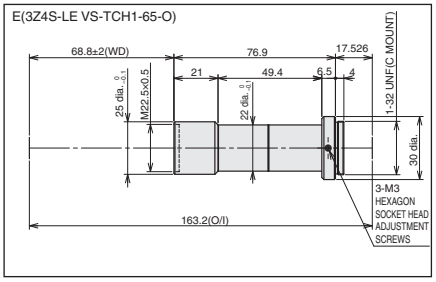

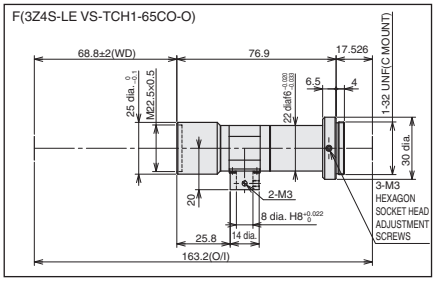

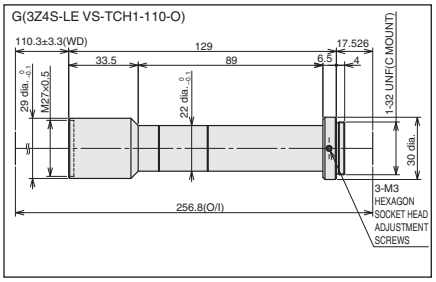

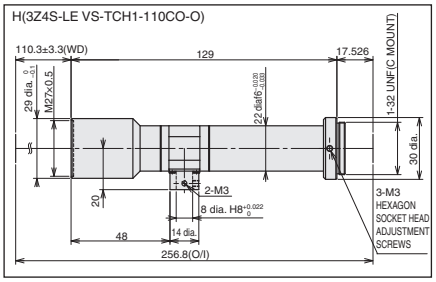

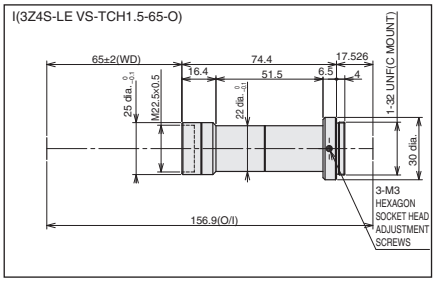

High-resolution Telecentric Lens for C-mount Cameras VS-TCH Series

Dimensions

(Unit: mm)

J(3Z4S-LE VS-TCH1.5-65CO-O)

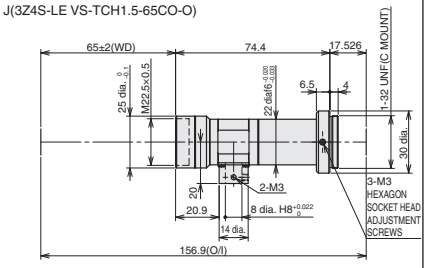

K(3Z4S-LE VS-TCH1.5-110-O)

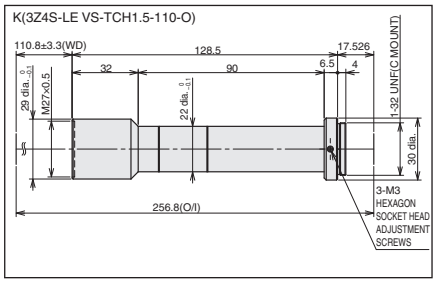

L(3Z4S-LE VS-TCH1.5-110CO-O)

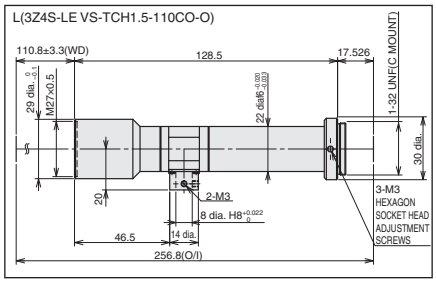

M(3Z4S-LE VS-TCH2-65-O)

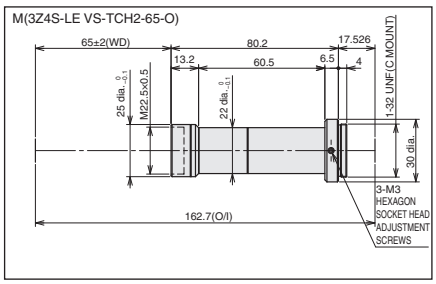

N(3Z4S-LE VS-TCH2-65CO-O)

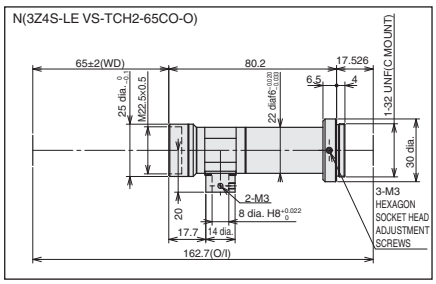

O(3Z4S-LE VS-TCH2-110-O)

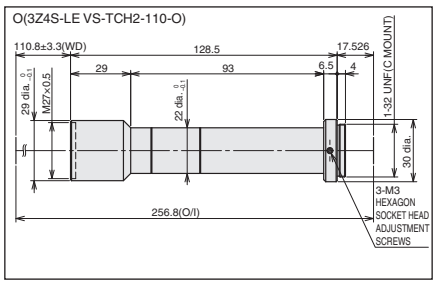

P(3Z4S-LE VS-TCH2-110CO-O)

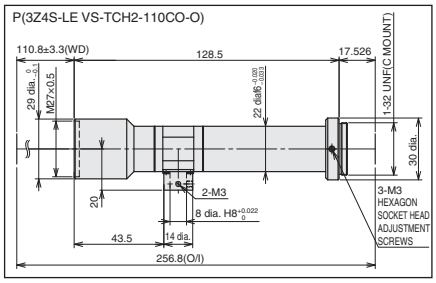

Q(3Z4S-LE VS-TCH4-65-O)

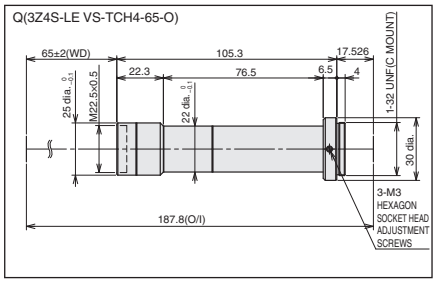

R(3Z4S-LE VS-TCH4-65CO-O)

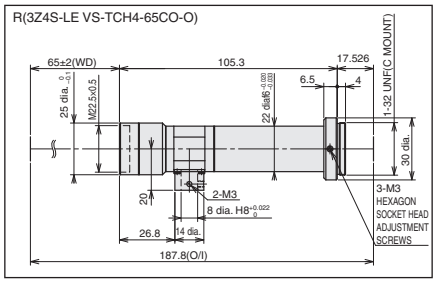

S(3Z4S-LE VS-TCH4-110-O)

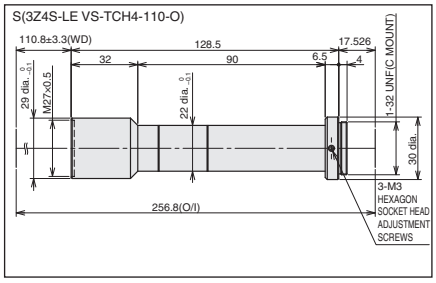

T(3Z4S-LE VS-TCH4-110CO-O)

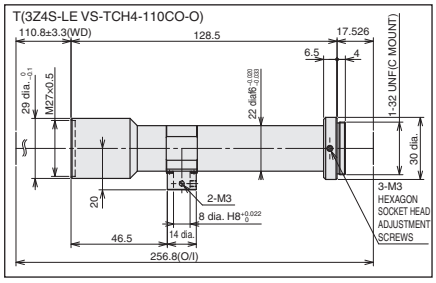

Specifications

Ambient temperature	Operating: 0 to 50°C, Storage: -10 to 60°C (with no icing or condensation)
Ambient humidity	Operating: 35% to 80%, Storage: 35% to 90% (with no condensation)

Ultra-high-resolution Telecentric Lens for C-mount Cameras

VS-TEV Series

- Ultra-high-resolution telecentric lens for 1.1-inch cameras.
- Lineup of 3 models to meet various optical magnification requirements.
- Variable magnification for use at a wide range of working distances. Balance between depth of field and contrast can be adjusted.
- Low-distortion design.
- High-quality images can be obtained from any part of the area.
- Ideal for high-accuracy alignment.

Ordering Information

Recommended camera	Model	Dimensions	Optical magnification	WD *1 (mm)	Effective FNO * Maximum aperture	Depth of field *2 (mm)	Resolution *3 (mm)	TV distortion	Weight (g)	Maximum compatible CCD
FH-S□02 FH-S□04 FH-S□X12 FH-S□21R	**3Z4S-LE VS-TEV0305**	A	0.3 ×	221.5	4.3	3.8	9.59	0.03%	390	1.1 inches
			0.4 ×	162.0	5.3	2.6	8.83	–0.04%		
			0.5 ×	125.8	6.2	2.0	8.39	–0.04%		
	3Z4S-LE VS-TEV05075	B	0.5 ×	173.2	5.0	1.6	6.71	0.06%	350	
			0.75 ×	133.9	6.8	1.0	6.10	0.04%		
	3Z4S-LE VS-TEV07510	C	0.75 ×	133.9	6.8	1.0	6.10	0.04%	370	
			1.0 ×	114.0	8.5	0.7	5.69	0.02%		

*1. The working distance is the distance from the end of the lens to the workpiece.
*2. The depth of field is calculated using a permissible circle of confusion diameter of 0.04 mm.
*3. The resolution is calculated using a wavelength of 550 nm.

Camera and Field of View Table

Camera	Size of image element (inch)	Imaging area H × V (mm)	Field of view H × V (mm)			
			0.3 × (VS-TEV0305)	0.5 × (VS-TEV0305/ VS-TEV05075)	0.75 × (VS-TEV05075/ VS-TEV-07510)	1.0 × (VS-TEV07510)
FH-S□02	2/3" equivalent	11.3 × 6.0	37.5 × 19.9	22.5 × 12.0	15.0 × 8.0	11.3 × 6.0
FH-S□04	1" equivalent	11.3 × 11.3	37.5 × 37.5	22.5 × 22.5	15.0 × 15.0	11.3 × 11.3
FH-S□X12	1.1" equivalent	14.1 × 10.4	47.1 × 34.5	28.2 × 20.7	18.8 × 13.8	14.1 × 10.4
FZ-S□21R	1" equivalent	13.3 × 8.9	44.4 × 29.6	26.6 × 17.7	17.7 × 11.8	13.3 × 8.9

Note: The field of view is a calculated value and not a guaranteed value.

Dimensions

(Unit: mm)

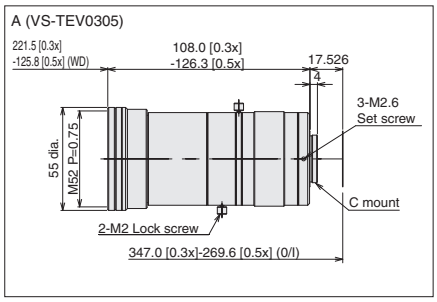

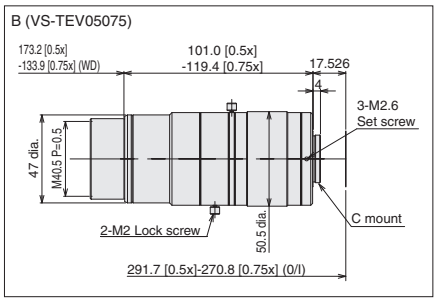

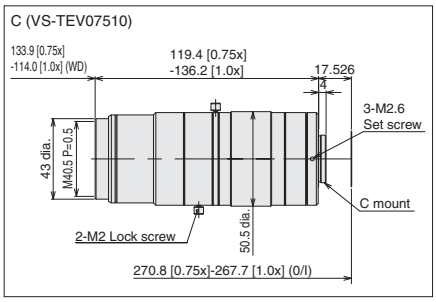

Specifications

Mounting	C mount
Ambient temperature	Operating: -5 to 50°C, Storage: -10 to 60°C (with no icing or condensation)
Ambient humidity	Operating: 0% to 80%, Storage: 0% to 90% (with no condensation)

Vibrations and Shocks Resistant Lens for C-mount Cameras

VS-MCA Series

- Vibrations and shocks resistant lens for megapixel C-mount cameras.
- Lineup of 10 models with focal lengths ranging from 4 to 75 mm.
- The increased resistance to vibration enables application in environments where the lens is moved and where ambient vibrations occur.
- Install in narrow space without a lock screw.
- The hexagonal lock ring makes tightening easier.

Ordering Information

Recommended camera	Model	Dimensions	Focal distance (mm)	Aperture (fixed F No.)	Maximum outer diameter (mm)	Total length (mm)	Filter size	WD (mm)	Depth of field * (mm)	Maximum compatible CCD
FZ-S□ FZ-SH□ FH-S□ FH-S□X FH-S□05R FHV7H-□	**3Z4S-LE VS-MCA4**	A	4	2	31 dia.	29.0 to 29.2	M27.0 P0.5	403.2	1680.0	1/2 inch
								196.2	420.0	
								92.7	105.0	
	3Z4S-LE VS-MCA4-F5.6			5.6	31 dia.	29.0 to 29.2	M27.0 P0.5	403.2	4560.0	
								196.2	1140.0	
								92.7	290.0	
	3Z4S-LE VS-MCA4-F8			8	31 dia.	29.0 to 29.2	M27.0 P0.5	403.2	6480.0	
								196.2	1640.0	
								92.7	415.0	
	3Z4S-LE VS-MCA6.5	B	6.5	2	31 dia.	23.1 to 23.4	M27.0 P0.5	656.0	1840.0	1/2 inch
								209.6	204.4	
								98.0	51.1	
	3Z4S-LE VS-MCA6.5-F5.6			5.6	31 dia.	23.1 to 23.4	M27.0 P0.5	656.0	4560.0	
								209.6	515.6	
								98.0	131.1	
	3Z4S-LE VS-MCA6.5-F8			8	31 dia.	23.1 to 23.4	M27.0 P0.5	656.0	6480.0	
								209.6	728.9	
								98.0	188.9	
	3Z4S-LE VS-MCA10	C	10	2	31 dia.	24.2 to 25.5	M27.0 P0.5	504.1	460.0	1/2 inch
								94.0	19.2	
								59.9	9.2	
	3Z4S-LE VS-MCA10-F5.6			5.6	31 dia.	24.2 to 25.5	M27.0 P0.5	504.1	1140.0	
								94.0	49.6	
								59.9	22.8	
	3Z4S-LE VS-MCA10-F8			8	31 dia.	24.2 to 25.5	M27.0 P0.5	504.1	1640.0	
								94.0	70.4	
								59.9	32.7	
FZ-S□ FZ-SH□ FH-S□ FH-S□X FZ-S□2M FZ-S□5M3 FH-S□05R FH-S□X05	**3Z4S-LE VS-MCA15**	D	15	2	31 dia.	27.9 to 32.0	M27.0 P0.5	490.7	186.7	2/3 inch
								65.4	4.8	
								40.3	2.3	
	3Z4S-LE VS-MCA15-F5.6			5.6	31 dia.	27.9 to 32.0	M27.0 P0.5	490.7	515.6	
								65.4	13.4	
								40.3	6.5	
	3Z4S-LE VS-MCA15-F8			8	31 dia.	27.9 to 32.0	M27.0 P0.5	490.7	728.9	
								65.4	19.2	
								40.3	9.2	

Recommended camera	Model	Dimensions	Focal distance (mm)	Aperture (fixed F No.)	Maximum outer diameter (mm)	Total length (mm)	Filter size	WD (mm)	Depth of field * (mm)	Maximum compatible CCD
FZ-S□ FZ-SH□ FH-S□ FH-S□X FZ-S□2M FZ-S□5M3 FH-S□05R FH-S□X05 FHV7H-□	**3Z4S-LE VS-MCA20**	E	20	2	31 dia.	24.5 to 32.0	M27.0 P0.5	516.8	105.0	2/3 inch
								81.8	3.2	
								50.7	1.5	
	3Z4S-LE VS-MCA20-F5.6			5.6	31 dia.	24.5 to 32.0	M27.0 P0.5	516.8	290.0	
								81.8	9.0	
								50.7	3.9	
	3Z4S-LE VS-MCA20-F8			8	31 dia.	24.5 to 32.0	M27.0 P0.5	516.8	415.0	
								81.8	12.8	
								50.7	5.6	
	3Z4S-LE VS-MCA25	F	25	2	31 dia.	27.0 to 38.5	M27.0 P0.5	514.6	67.2	2/3 inch
								106.6	3.2	
								55.6	1.0	
	3Z4S-LE VS-MCA25-F5.6			5.6	31 dia.	27.0 to 38.5	M27.0 P0.5	514.6	188.8	
								106.6	9.0	
								55.6	2.7	
	3Z4S-LE VS-MCA25-F8			8	31 dia.	27.0 to 38.5	M27.0 P0.5	514.6	268.8	
								106.6	12.8	
								55.6	3.8	
	3Z4S-LE VS-MCA30	G	30	2	31 dia.	24.5 to 36.2	M27.0 P0.5	513.5	53.3	2/3 inch
								213.5	8.2	
								80.1	1.3	
	3Z4S-LE VS-MCA30-F5.6			5.6	31 dia.	24.5 to 36.2	M27.0 P0.5	513.5	131.1	
								213.5	22.8	
								80.1	3.2	
	3Z4S-LE VS-MCA30-F8			8	31 dia.	24.5 to 36.2	M27.0 P0.5	513.5	188.9	
								213.5	32.7	
								80.1	4.6	
	3Z4S-LE VS-MCA35	H	35	2	31 dia.	32.0 to 45.7	M27.0 P0.5	163.9	3.0	2/3 inch
								145.9	2.2	
								83.1	0.7	
	3Z4S-LE VS-MCA35-F5.6			5.6	31 dia.	32.0 to 45.7	M27.0 P0.5	163.9	8.4	
								145.9	6.5	
								83.1	1.7	
	3Z4S-LE VS-MCA35-F8			8	31 dia.	32.0 to 45.7	M27.0 P0.5	163.9	12.0	
								145.9	9.2	
								83.1	2.5	
	3Z4S-LE VS-MCA50	I	50	2	31 dia.	44.0 to 63.4	M27.0 P0.5	633.6	32.5	2/3 inch
								270.1	6.0	
								128.7	1.3	
	3Z4S-LE VS-MCA50-F5.6			5.6	31 dia.	44.0 to 63.4	M27.0 P0.5	633.6	75.0	
								270.1	13.4	
								128.7	2.9	
	3Z4S-LE VS-MCA50-F8			8	31 dia.	44.0 to 63.4	M27.0 P0.5	633.6	107.5	
								270.1	19.2	
								128.7	4.1	
	3Z4S-LE VS-MCA75	J	75	2	31 dia.	70.0 to 105.5	M27.0 P0.5	562.9	16.7	2/3 inch
								404.4	9.2	
								153.8	1.3	
	3Z4S-LE VS-MCA75-F5.6			5.6	31 dia.	70.0 to 105.5	M27.0 P0.5	562.9	28.6	
								404.4	13.4	
								153.8	2.5	
	3Z4S-LE VS-MCA75-F8			8	31 dia.	70.0 to 105.5	M27.0 P0.5	562.9	41.2	
								404.4	19.2	
								153.8	3.6	

Note: Vibrations and Shocks Resistant Lenses for 1-inch image sensors are also available. Ask your OMRON representative for details.

* Calculated using a permissible circle of confusion diameter of 0.04 mm.

Vibrations and Shocks Resistant Lens for C-mount Cameras VS-MCA Series

Dimensions

(Unit:mm)

A (VS-MCA4)

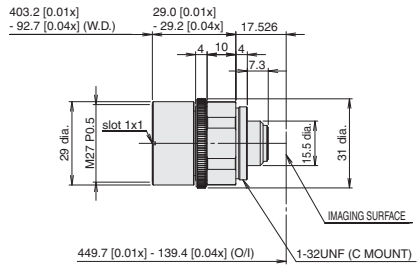

B (VS-MCA6.5)

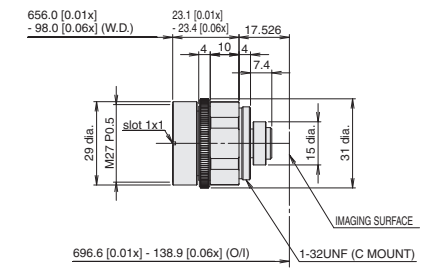

C (VS-MCA10)

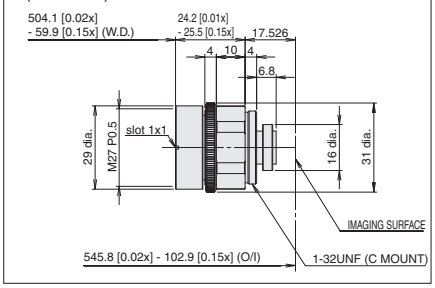

D (VS-MCA15)

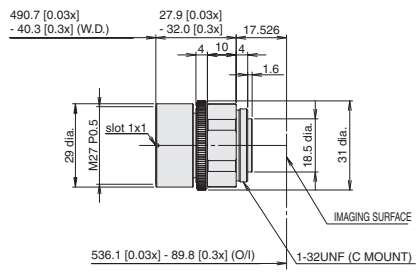

E (VS-MCA20)

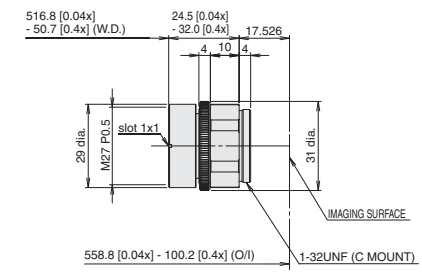

F (VS-MCA25)

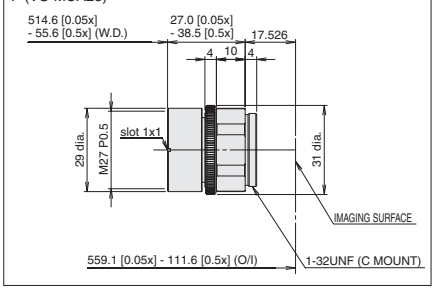

G (VS-MCA30)

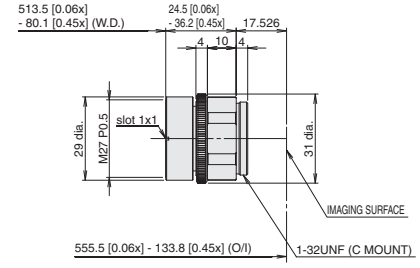

H (VS-MCA35)

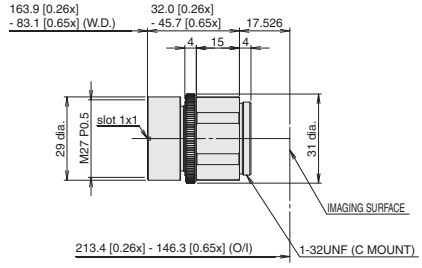

I (VS-MCA50)

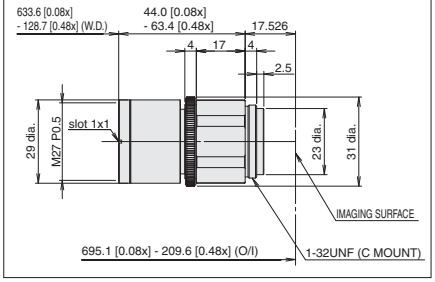

J (VS-MCA75)

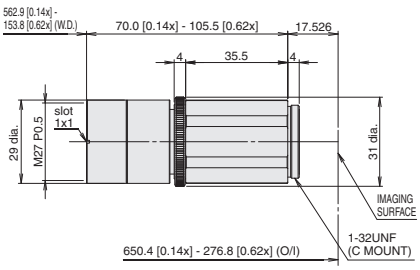

Specifications

Mounting	C mount
Ambient temperature	Operating: -5 to 50°C, Storage: -10 to 60°C (with no icing or condensation)
Ambient humidity	Operating: 35% to 80%, Storage: 35% to 90% (with no condensation)

Optical Chart

Refer to page 95, 96, 97, 99 and 100.

Non-telecentric Macro Lens for C-mount Cameras

VS-MC Series

- Lineup of 4 models with magnifications ranging from 0.1x to 1.0x and WD ranging from 82.4 to 325.5 mm.
- 16-mm-dia. simple mechanism with high resistance to vibration.

Ordering Information

Recommend camera	Model	Dimensions	Magnification	Effective FNO	O/I (mm)	WD (mm)	Depth of field *1 (mm)	Resolution *2 (μm)	TV distortion
FZ-S□ FZ-SH□ FH-S□ FH-S□X FZ-S□2M FZ-S□5M3 FH-S□05R FH-S□X05 FHV7H-□	**3Z4S-LE VS-MC01-330**	A	0.1x	4.43	364.5	325.5	35.4	30.5	0.01% max.
	3Z4S-LE VS-MC03-180	B	0.3x	5.29	248.5	184.8	4.7	11.6	0.00% max.
	3Z4S-LE VS-MC05-130	C	0.5x	6.10	198.8	126.3	2.0	8.2	0.00% max.
	3Z4S-LE VS-MC1-80	D	1.0x	8.14	176.8	82.4	0.7	5.5	0.00% max.

*1. Calculated using a permissible circle of confusion diameter of 0.04 mm.
*2. Calculated using a wavelength of 550 nm.

Camera and Field of View Table

Camera	Size of image element (inch)	Imaging area H×V (mm)	Field of view H×V (mm)			
			0.1 × (VS-MC01-330)	0.3 × (VS-MC03-180)	0.5 × (VS-MC05-130)	1.0 × (VS-MC1-80)
FH-S□/FZ-S□/FZ-SH□	1/3" equivalent	4.8 × 3.6	48.0 × 36.0	16.0 × 12.0	9.6 × 7.2	4.8 × 3.6
FH-S□X	1/2.9" equivalent	5.0 × 3.8	50.0 × 38.0	16.7 × 12.7	10.0 × 7.6	5.0 × 3.8
FH-S□05R	1/2.5" equivalent	5.7 × 4.3	57.0 × 43.0	19.0 × 14.3	11.4 × 8.6	5.7 × 4.3
FZ-S□2M	1/1.8" equivalent	7.0 × 5.3	70.0 × 53.0	23.3 × 17.7	14.0 × 10.6	7.0 × 5.3
FH-S□X05/FZ-S□5M3	2/3" equivalent	8.4 × 7.1	84.0 × 71.0	28.0 × 23.7	16.8 × 14.2	8.4 × 7.1
FHV7H-□004-C	1/2.9" equivalent	5.0×3.8	50.0×38.0	16.7×12.7	10.0×7.6	5.0×3.8
FHV7H-□016-C	1/2.9" equivalent	5.0×3.8	50.0×38.0	16.7×12.7	10.0×7.6	5.0×3.8
FHV7H-□032-C	1/1.8" equivalent	7.1×5.3	71.0×53.0	23.7×17.7	14.2×10.6	7.1×5.3
FHV7H-□050-C	2/3" equivalent	8.5×7.1	85.0×71.0	28.3×23.7	17.0×14.2	8.5×7.1
FHV7H-□063R-C	1/1.8" equivalent	7.4×5.0	74.0×50.0	24.7×16.7	14.8×10.0	7.4×5.0
FHV7H-□120R-C	1/1.7" equivalent	7.4×5.6	74.0×56.0	24.7×18.7	14.8×11.2	7.4×5.6

Note:The field of view is a calculated value and not a guaranteed value.

Dimensions

(Unit:mm)

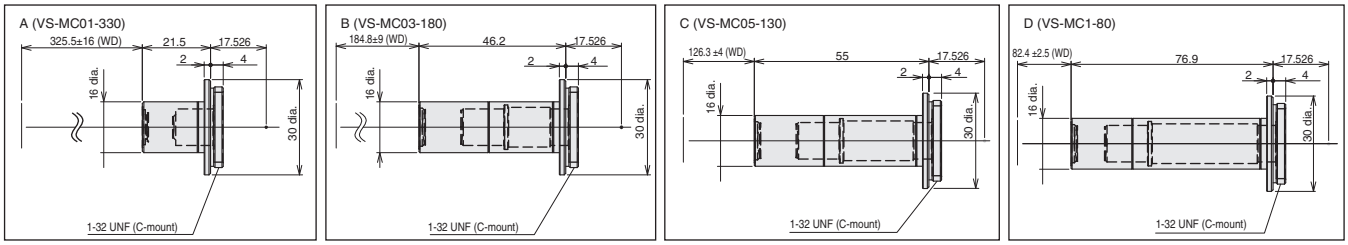

Specifications

Mounting	C mount
Ambient temperature	Operating: 0 to 50°C, Storage: -10 to 60°C (with no icing or condensation)
Ambient humidity	Operating: 35% to 80%, Storage: 35% to 90% (with no condensation)

High-resolution, Vibrations and Shocks Resistant Lens for C-mount Cameras

VS-MCH1 Series

- Vibrations resistant lens with iris plate system for megapixel C-mount cameras
- Lineup of 6 models with focal lengths ranging from 8 to 50 mm
- Iris plate system to change F number
- Threaded iris plate system to lock the iris in place
- Hexagonal/octagonal lens mount, lock ring, and lens end make tightening easier
- Ideal for use in environments where the point-locked lens is moved under the effects of ambient vibration
- Install in narrow space without a lock screw

Ordering Information

Recommended camera	Model	Dimensions	Focal distance (mm)	Aperture (F No)	Maximum outer diameter (mm)	Total length (mm)	Filter size	WD (mm)	Depth of field * (mm)	Maximum compatible CCD
FH-S□02 FH-S□04 FH-S□21R	3Z4S-LE VS-MC08H1	A	8	1.4	59 dia.	59.0 to 60.2	M55.0 P0.75	302.6	179.0	1 inch
								55.4	12.0	
								27.9	5.7	
				5.6				302.6	735.0	
								55.4	49.3	
								27.9	22.9	
				8				302.6	1050.0	
								55.4	70.4	
								27.9	32.7	
	3Z4S-LE VS-MC12H1	B	12	1.4	38 dia.	48.0 to 49.8	M35.5 P0.5	465.4	179.0	1 inch
								103.8	12.0	
								63.6	5.7	
				5.6				465.4	735.0	
								103.8	49.3	
								63.6	22.9	
				8				465.4	1050.0	
								103.8	70.4	
								63.6	32.7	
	3Z4S-LE VS-MC16H1	C	16	1.4	36.5 dia.	45.0 to 49.1	M30.5 P0.5	648.1	179.0	1 inch
								176.6	12.0	
								58.1	2.3	
				5.6				648.1	735.0	
								176.6	49.3	
								58.1	9.0	
				8				648.1	1050.0	
								176.6	70.4	
								58.1	12.8	
	3Z4S-LE VS-MC25H1	D	25	1.4	36.5 dia.	33.5 to 42.4	M30.5 P0.5	1007.9	179.0	1 inch
								245.3	12.0	
								63.7	1.2	
				5.6				1007.9	735.0	
								245.3	49.3	
								63.7	4.9	
				8				1007.9	1050.0	
								245.3	70.4	
								63.7	7.1	
	3Z4S-LE VS-MC35H1	E	35	1.4	36.5 dia.	35.0 to 43.8	M30.5 P0.5	1405.7	179.0	1 inch
								352.9	12.0	
								142.3	2.3	
				5.6				1405.7	735.0	
								352.9	49.3	
								142.3	9.0	
				8				1405.7	1050.0	
								352.9	70.4	
								142.3	12.8	

Recommended camera	Model	Dimensions	Focal distance (mm)	Aperture (F No)	Maximum outer diameter (mm)	Total length (mm)	Filter size	WD (mm)	Depth of field * (mm)	Maximum compatible CCD
FH-S□02 FH-S□04 FH-S□21R	**3Z4S-LE VS-MC50H1**	F	50	1.4	44 dia.	44.5 to 52.0	M40.5 P0.5	2001.9	179.0	1 inch
								504.1	12.0	
								337.7	5.7	
				5.6				2001.9	735.0	
								504.1	49.3	
								337.7	22.9	
				8				2001.9	1050.0	
								504.1	70.4	
								337.7	32.7	

* Calculated using a permissible circle of confusion diameter of 0.04 mm.

Dimensions

(Unit:mm)

A (VS-MC08H1)

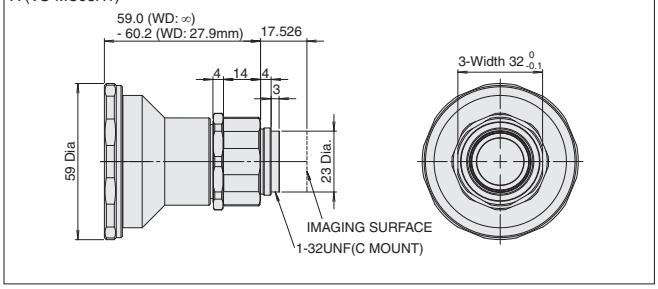

B (VS-MC12H1)

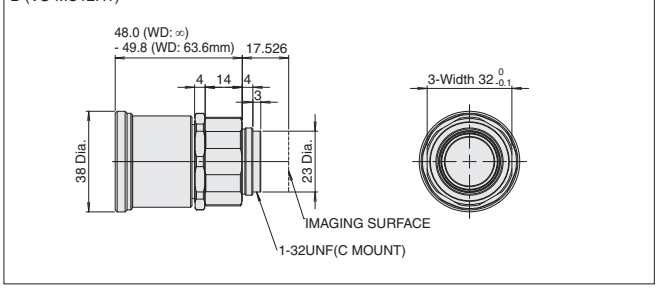

C (VS-MC16H1)

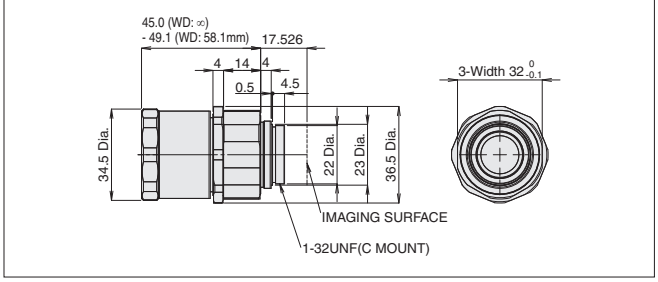

D (VS-MC25H1)

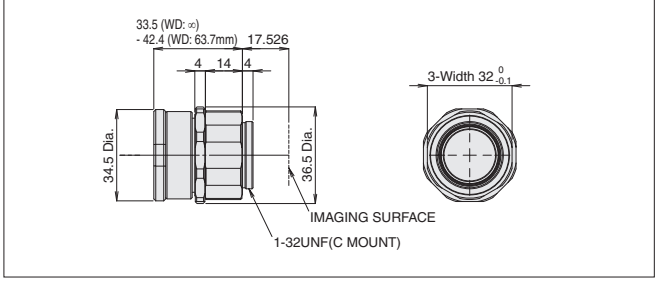

E (VS-MC35H1)

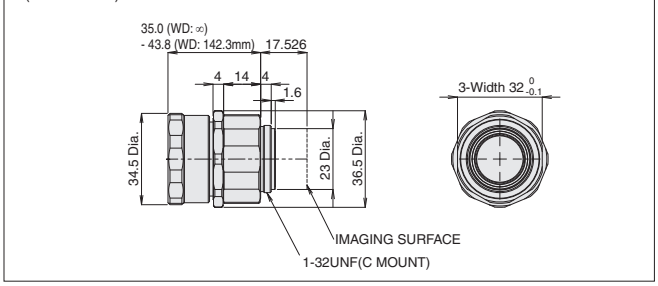

F (VS-MC50H1)

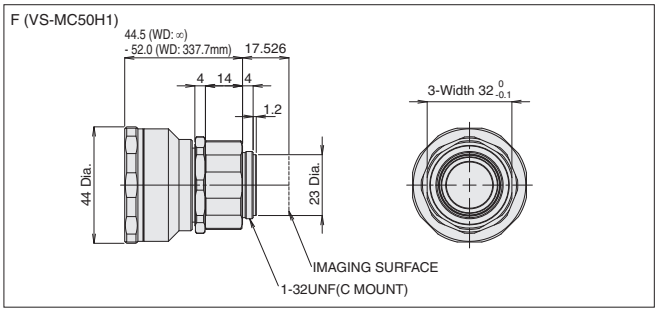

Specifications

Mounting	C mount
Ambient temperature	Operating: -5 to 50°C, Storage: -10 to 60°C (with no icing or condensation)
Ambient humidity	Operating: 0% to 80%, Storage: 0% to 90% (with no condensation)

Optical Chart

Refer to page 95.

High-resolution, Vibrations and Shocks Resistant Lens for C-mount Cameras

VS-MCH Series

- Vibrations resistant lens for C-mount cameras.
- Lineup of 21 models: focal lengths from 12 to 100 mm and F-numbers of maximum aperture, 5.6, and 8.0.
- A lock ring locking the surface and the improved design of internal structure increase resistance to vibration in comparison to the previous model. This enables application in environments where the point-locked lens is moved under the effects of ambient vibration.
- Install in narrow space without a lock screw.

Note: Orders for VS-MCH series have been discontinued at the end of March 2021.

Ordering Information

Recommended camera	Model	Dimensions	Focal distance (mm)	Aperture (F No)	Maximum outer diameter (mm)	Total length (mm)	Filter size	WD (mm)	Depth of field (mm)	Maximum compatible CCD
FH-S□02 FH-S□04 FH-S□21R	**3Z4S-LE VS-MCH12**	A	12	2	38 dia.	48.0 to 49.8	M35.5 P0.5	465.4	262.0	1 inch
								103.8	17.6	
								63.6	8.2	
	3Z4S-LE VS-MCH12-FNO56			5.6	38 dia.	48.0 to 49.8	M35.5 P0.5	465.4	735.0	
								103.8	49.3	
								63.6	22.9	
	3Z4S-LE VS-MCH12-FNO80			8	38 dia.	48.0 to 49.8	M35.5 P0.5	465.4	1050.0	
								103.8	70.4	
								63.6	32.7	
	3Z4S-LE VS-MCH16N	B	16	2	38 dia.	45.4 to 49.1	M34.0 P0.5	648.1	262.0	1 inch
								176.6	17.6	
								58.1	3.2	
	3Z4S-LE VS-MCH16N-FNO56			5.6	38 dia.	45.4 to 49.1	M34.0 P0.5	648.1	735.0	
								176.6	49.3	
								58.1	9.0	
	3Z4S-LE VS-MCH16N-FNO80			8	38 dia.	45.4 to 49.1	M34.0 P0.5	648.1	1050.0	
								176.6	70.4	
								58.1	12.8	
	3Z4S-LE VS-MCH25	C	25	2	38 dia.	33.5 to 42.4	M34.0 P0.5	1007.9	262.0	1 inch
								245.3	17.6	
								63.7	1.8	
	3Z4S-LE VS-MCH25-FNO56			5.6	38 dia.	33.5 to 42.4	M34.0 P0.5	1007.9	735.0	
								245.3	49.3	
								63.7	4.9	
	3Z4S-LE VS-MCH25-FNO80			8	38 dia.	33.5 to 42.4	M34.0 P0.5	1007.9	1050.0	
								245.3	70.4	
								63.7	7.1	
	3Z4S-LE VS-MCH35	D	35	2	38 dia.	35.0 to 43.8	M34.0 P0.5	1405.7	262.0	1 inch
								352.9	17.6	
								142.3	3.2	
	3Z4S-LE VS-MCH35-FNO56			5.6	38 dia.	35.0 to 43.8	M34.0 P0.5	1405.7	735.0	
								352.9	49.3	
								142.3	9.0	
	3Z4S-LE VS-MCH35-FNO80			8	38 dia.	35.0 to 43.8	M34.0 P0.5	1405.7	1050.0	
								352.9	70.4	
								142.3	12.8	
	3Z4S-LE VS-MCH50	E	50	2	43 dia.	44.5 to 52.0	M40.5 P0.5	2001.9	262.0	1 inch
								504.1	17.6	
								337.7	3.2	
	3Z4S-LE VS-MCH50-FNO56			5.6	43 dia.	44.5 to 52.0	M40.5 P0.5	2001.9	735.0	
								504.1	49.3	
								337.7	22.9	
	3Z4S-LE VS-MCH50-FNO80			8	43 dia.	44.5 to 52.0	M40.5 P0.5	2001.9	1050.0	
								504.1	70.4	
								337.7	32.7	

Recommended camera	Model	Dimensions	Focal distance (mm)	Aperture (F No)	Maximum outer diameter (mm)	Total length (mm)	Filter size	WD (mm)	Depth of field (mm)	Maximum compatible CCD
FH-S□02 FH-S□04 FH-S□21R	**3Z4S-LE VS-MCH75**	F	75	2.5	38 dia.	49.5 to 60.7	M34.0 P0.5	3105.9	262.0	1 inch
								857.4	17.6	
								607.6	8.2	
	3Z4S-LE VS-MCH75-FNO56			5.6	38 dia.	49.5 to 60.7	M34.0 P0.5	3105.9	735.0	
								857.4	49.3	
								607.6	22.9	
	3Z4S-LE VS-MCH75-FNO80			8	38 dia.	49.5 to 60.7	M34.0 P0.5	3105.9	1050.0	
								857.4	70.4	
								607.6	32.7	
	3Z4S-LE VS-MCH100	G	100	2.8	40 dia.	66.5 to 76.3	M37.5 P0.5	4043.7	262.0	1 inch
								2088.1	94.1	
								1110.3	17.6	
	3Z4S-LE VS-MCH100-FNO56			5.6	40 dia.	66.5 to 76.3	M37.5 P0.5	4043.7	735.0	
								2088.1	188.2	
								1110.3	49.3	
	3Z4S-LE VS-MCH100-FNO80			8	40 dia.	66.5 to 76.3	M37.5 P0.5	4043.7	1050.0	
								2088.1	268.8	
								1110.3	70.4	

Dimensions

(Unit:mm)

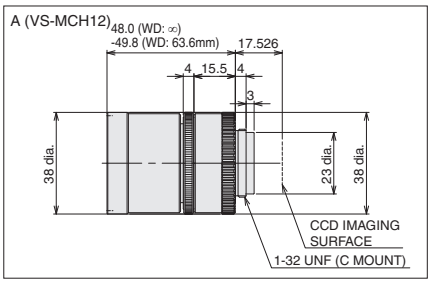

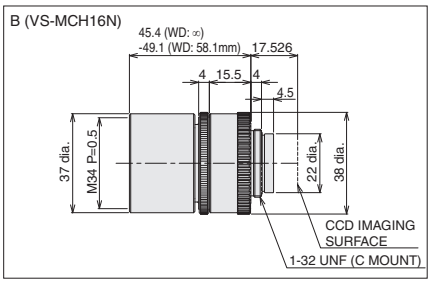

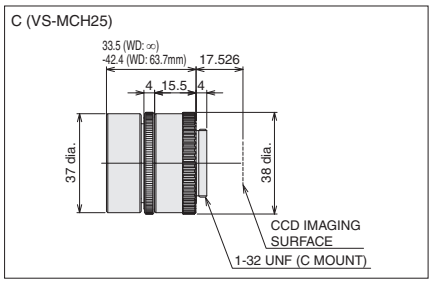

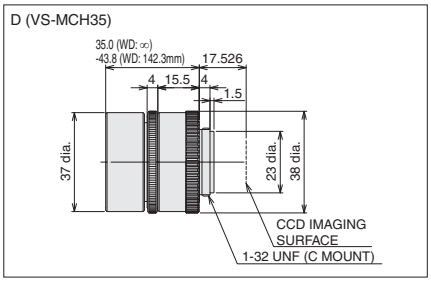

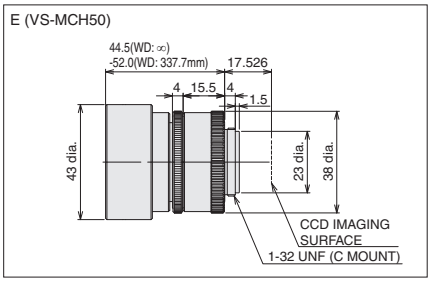

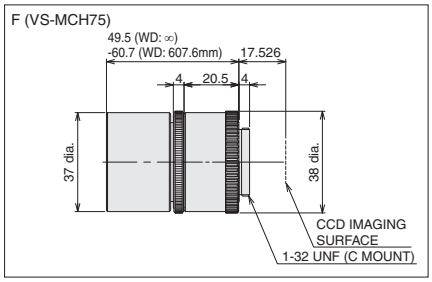

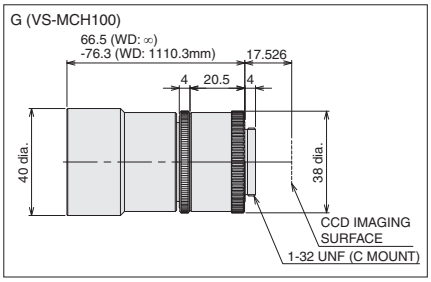

Specifications

Mounting	C mount
Ambient temperature	Operating: -5 to 50°C, Storage: -10 to 60°C (with no icing or condensation)
Ambient humidity	Operating: 0% to 80%, Storage: 0% to 90% (with no condensation)

Optical Chart

Refer to page 96, and 97.

Vibrations and Shocks Resistant Lens for M42-mount Cameras

VS-MCL/M42-10 Series

- Vibrations resistant lens for M42-mount cameras.
- Lineup of 18 models: focal lengths from 18 to 100 mm and F-numbers of maximum aperture, 5.6, and 8.0.
- A lock ring locking the surface and the improved design of internal structure increase resistance to vibration in comparison to the previous model. This enables application in environments where the point-locked lens is moved under the effects of ambient vibration.
- Install in narrow space without a lock screw.

Ordering Information

Recommended camera	Model	Dimensions	Focal distance (mm)	Aperture (F No)	Maximum outer diameter (mm)	Total length (mm)	Filter size	WD (mm)	Depth of field (mm)	Maximum compatible CCD
FH-S□12	3Z4S-LE VS-MCL18/M42-10	A	18	2.8	52 dia.	91.5 to 96.1	M46.0 P0.75	722.9	367.0	1.8 inches
								168.4	24.6	
								57.9	4.5	
	3Z4S-LE VS-MCL18-FNO56/M42-10			5.6	52 dia.	91.5 to 96.1	M46.0 P0.75	722.9	735.0	
								168.4	188.0	
								57.9	9.0	
	3Z4S-LE VS-MCL18-FNO80/M42-10			8	52 dia.	91.5 to 96.1	M46.0 P0.75	722.9	1050.0	
								168.4	269.0	
								57.9	12.8	
	3Z4S-LE VS-MCL25/M42-10	B	25	2.6	52 dia.	72.0 to 82.3	M46.0 P0.75	1010.8	367.0	1.8 inches
								496.6	94.0	
								52.8	1.8	
	3Z4S-LE VS-MCL25-FNO56/M42-10			5.6	52 dia.	72.0 to 82.3	M46.0 P0.75	1010.8	735.0	
								496.6	188.0	
								52.8	3.9	
	3Z4S-LE VS-MCL25-FNO80/M42-10			8	52 dia.	72.0 to 82.3	M46.0 P0.75	1010.8	1050.0	
								496.6	269.0	
								52.8	5.6	
	3Z4S-LE VS-MCL35/M42-10	C	35	2.8	55 dia.	99.5 to 117.6	M52.0 P0.75	1437.4	367.0	1.8 inches
								346.8	24.6	
								62.2	1.3	
	3Z4S-LE VS-MCL35-FNO56/M42-10			5.6	55 dia.	99.5 to 117.6	M52.0 P0.75	1437.4	735.0	
								346.8	49.3	
								62.2	2.7	
	3Z4S-LE VS-MCL35-FNO80/M42-10			8	55 dia.	99.5 to 117.6	M52.0 P0.75	1437.4	1050.0	
								346.8	70.4	
								62.2	3.8	
	3Z4S-LE VS-MCL50/M42-10	D	50	2.8	52 dia.	64.0 to 82.0	M46.0 P0.75	1025.0	97.6	1.8 inches
								513.7	24.6	
								153.7	2.0	
	3Z4S-LE VS-MCL50-FNO56/M42-10			5.6	52 dia.	64.0 to 82.0	M46.0 P0.75	1025.0	188.0	
								513.7	49.3	
								153.7	3.9	
	3Z4S-LE VS-MCL50-FNO80/M42-10			8	52 dia.	64.0 to 82.0	M46.0 P0.75	1025.0	269.0	
								513.7	70.4	
								153.7	5.6	
	3Z4S-LE VS-MCL85/M42-10	E	85	4	52 dia.	105.0 to 130.2	M46.0 P0.75	1724.8	134.0	1.8 inches
								452.5	9.6	
								285.0	3.5	
	3Z4S-LE VS-MCL85-FNO56/M42-10			5.6	52 dia.	105.0 to 130.2	M46.0 P0.75	1724.8	188.0	
								452.5	13.4	
								285.0	4.9	
	3Z4S-LE VS-MCL85-FNO80/M42-10			8	52 dia.	105.0 to 130.2	M46.0 P0.75	1724.8	269.0	
								452.5	19.2	
								285.0	7.1	

Recommended camera	Model	Dimensions	Focal distance (mm)	Aperture (F No)	Maximum outer diameter (mm)	Total length (mm)	Filter size	WD (mm)	Depth of field (mm)	Maximum compatible CCD
FH-S□12	**3Z4S-LE VS-MCL100/M42-10**	F	100	2.8	52 dia.	110.0 to 135.0	M46.0 P0.75	2050.2	94.1	1.8 inches
								1075.2	24.6	
								408.5	3.2	
	3Z4S-LE VS-MCL100-FNO56/M42-10			5.6	52 dia.	110.0 to 135.0	M46.0 P0.75	2050.2	188.0	
								1075.2	49.3	
								408.5	6.5	
	3Z4S-LE VS-MCL100-FNO80/M42-10			8	52 dia.	110.0 to 135.0	M46.0 P0.75	2050.2	269.0	
								1075.2	70.4	
								408.5	9.2	

Dimensions

(Unit:mm)

A (VS-MCL18/M42-10)

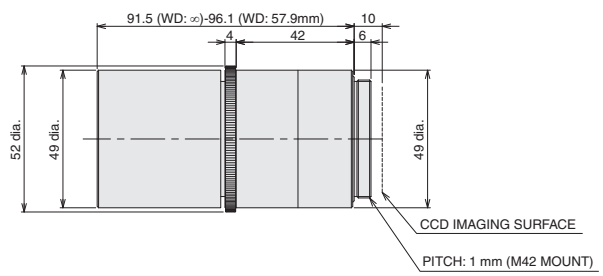

B (VS-MCL25/M42-10)

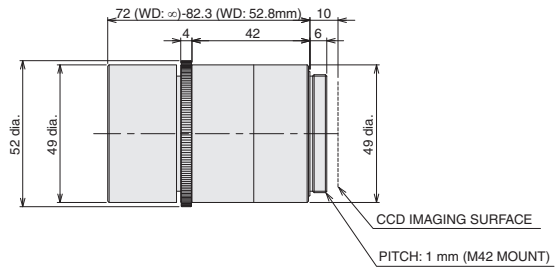

C (VS-MCL35/M42-10)

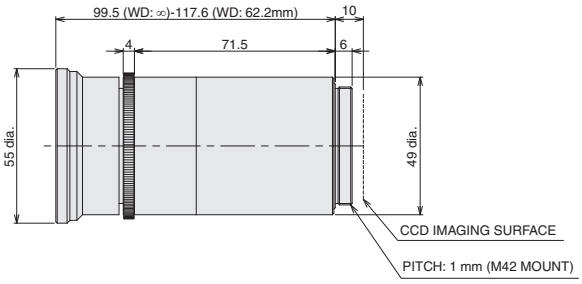

D (VS-MCL50/M42-10)

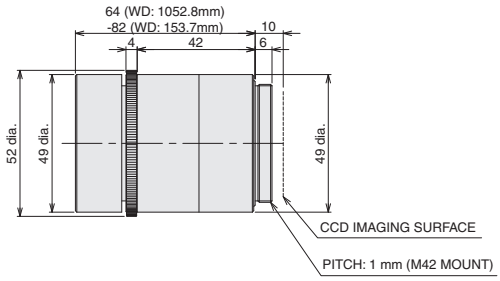

E (VS-MCL85/M42-10)

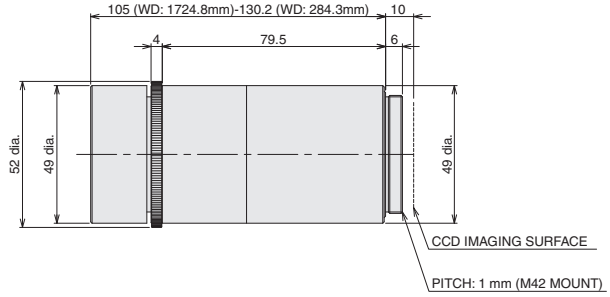

F (VS-MCL100/M42-10)

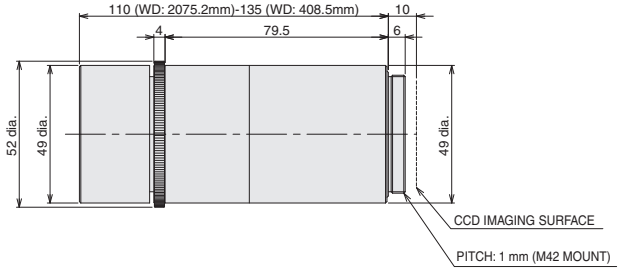

Specifications

Mounting	M42 mount
Ambient temperature	Operating: -5 to 50°C, Storage: -10 to 60°C (with no icing or condensation)
Ambient humidity	Operating: 0% to 80%, Storage: 0% to 90% (with no condensation)

Optical Chart

Refer to page 97.

Lens Option

Polarizing Filter SV-PL Series

- Prevents diffused reflection.
- Available for lenses for C-mount cameras.

Ordering Information

Item	Size	Anti-rotation mechanism: Provided		Anti-rotation mechanism: Not provided	
		Model	Weight (g)	Model	Weight (g)
Polarizing Filter	M22.5 P0.5	**3Z4S-LE SV-PL225-SS**	5	–	–
	M25.5 P0.5	**3Z4S-LE SV-PL255-SS**	6	**3Z4S-LE SV-PL255**	5.5
	M27.0 P0.5	**3Z4S-LE SV-PL270-SS**	6.5	**3Z4S-LE SV-PL270**	6
	M30.5 P0.5	**3Z4S-LE SV-PL305-SS**	8	**3Z4S-LE SV-PL305**	7.5
	M34.0 P0.5	**3Z4S-LE SV-PL340-SS**	10	**3Z4S-LE SV-PL340**	9.5
	M35.5 P0.5	**3Z4S-LE SV-PL355-SS**	10	**3Z4S-LE SV-PL355**	9.5
	M37.5 P0.5	**3Z4S-LE SV-PL375-SS**	12	**3Z4S-LE SV-PL375**	11.5
	M40.5 P0.5	**3Z4S-LE SV-PL405-SS**	12.5	**3Z4S-LE SV-PL405**	12
	M52.0 P0.75	**3Z4S-LE SV-PL520-SS**	19	**3Z4S-LE SV-PL520**	18.5
	M55.0 P0.75	**3Z4S-LE SV-PL550-SS**	21	**3Z4S-LE SV-PL550**	20.5
	M62.0 P0.75	**3Z4S-LE SV-PL620-SS**	28.5	**3Z4S-LE SV-PL620**	27.5

Specifications

Ambient temperature	Operating: 0 to 50°C, Storage: -10 to 60°C (with no icing or condensation)
Ambient humidity	Operating: 35% to 80%, Storage: 35% to 90% (with no condensation)

Protection Cover Filter SV-GA Series

- Used to protect lens surface from dust.
- Available for lenses for C-mount cameras.

Ordering Information

Item	Model	Size	Weight (g)
Protection Cover Filter	**3Z4S-LE SV-GA225**	M22.5 P0.5	4
	3Z4S-LE SV-GA255	M25.5 P0.5	4.5
	3Z4S-LE SV-GA270	M27.0 P0.5	5.5
	3Z4S-LE SV-GA305	M30.5 P0.5	6.5
	3Z4S-LE SV-GA340	M34.0 P0.5	8
	3Z4S-LE SV-GA355	M35.5 P0.5	8.5
	3Z4S-LE SV-GA375	M37.5 P0.5	9
	3Z4S-LE SV-GA405	M40.5 P0.5	10.5
	3Z4S-LE SV-GA520	M52.0 P0.75	15
	3Z4S-LE SV-GA550	M55.0 P0.75	16
	3Z4S-LE SV-GA620	M62.0 P0.75	25

Specifications

Ambient temperature	Operating: 0 to 50°C, Storage: -10 to 60°C (with no icing or condensation)
Ambient humidity	Operating: 35% to 80%, Storage: 35% to 90% (with no condensation)

Extension Tubes

Ordering Information

Lenses	Model	Contents
For C-mount Lens	**3Z4S-LE SV-EXR**	Set of 7 tubes *1,*2 (40 mm, 20 mm,10 mm, 5 mm, 2mm, 1 mm, 0.5 mm) Maximum outer diameter: 30 mm dia.
For M42-mount Cameras	**3Z4S-LE VS-EXR/M42**	Set of 5 tubes *1 (20 mm, 10 mm, 8 mm, 2 mm, and 1 mm) Maximum outer diameter: 47.5 mm dia.
For Small Digital CCD Cameras	**FZ-LESR**	Set of 3 tubes (15 mm, 10 mm, 5 mm) Maximum outer diameter: 12 mm dia.

*1. Do not use the 0.5-mm, 1.0-mm, and 2.0-mm Extension Tubes attached to each other. Since these Extension Tubes are placed over the threaded section of the Lens or other Extension Tube, the connection may loosen when more than one 0.5-mm, 1.0-mm or 2.0-mm Extension Tube are used together.
Reinforcement is required to protect against vibration when Extension Tubes exceeding 30 mm are used. When using the Extension Tube, check it on the actual device before using it.
*2. These Extension Tubes are also available individually. Order using the following model number, replacing the box with the desired length: 3Z4SLE SV-EXR□. (0.5, 1, 2, 5, 10, 15, 20, 25, 30, 40, 50 mm)

Rear Converter Lens

Ordering Information

Model
3Z4S-LE SV-1.5X *1
3Z4S-LE SV-2.0X *2

*1. In the following lenses, it is necessary to use it together with the extension tubes of 5 mm or more.
SV-0614H, SV-0814H, SV-1214H, SV-2514H, SV-0614V, SV-0813V
*2. In the following lenses, it is necessary to use it together with the extension tubes of 5 mm or more.
SV-0614H, SV-0814H, SV-1214H, SV-2514H, SV-0813V

●Configuration

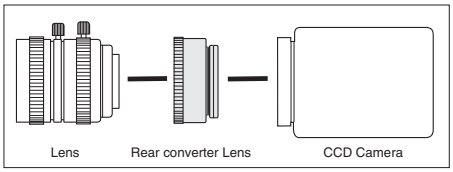

M42 - F Mount Conversion Adapter

Ordering Information

Cameras	Lenses	Model
FH-S□12 (M42 mount)	F mount	**FH-ADF/M42-10**

Optical Chart

Optical Chart

Meaning of Optical Chart

The X axis of the optical chart shows the field of vision (mm) (*1), and the Y axis of the optical chart shows the camera installation distance (mm) (*2).

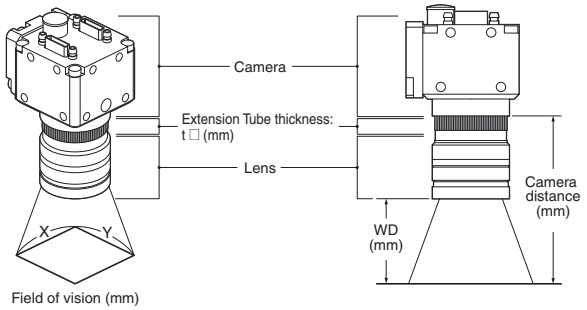

*1. The lengths of the fields of vision given in the optical charts are the lengths of the Y axis.
*2. The vertical axis represents WD for small cameras.

Vision system FH/FZ Series

Standard Lenses

Small Digital CCD Cameras FZ-SF□, FZ-SP□ 0.3 million-pixel (Using FZ-LES Series)

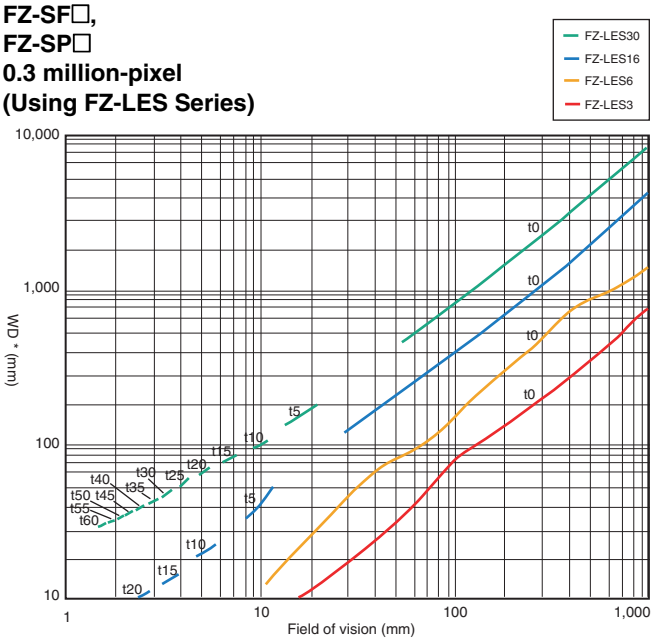

* The vertical axis represents WD, not installation distance.

High-speed Digital CMOS Camera FH-S□, High-speed Digital CCD Camera FZ-SH□, Digital CCD Camera FZ-S□ 0.3 million-pixel (Using 3Z4S-LE SV-V Series)

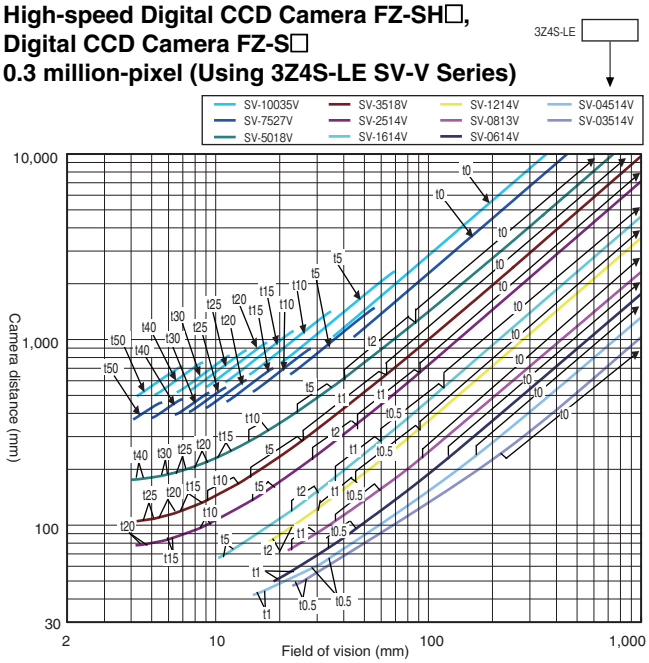

High-speed Digital CMOS Camera FH-S□X 0.4 million-pixel (Using 3Z4S-LE SV-V Series)

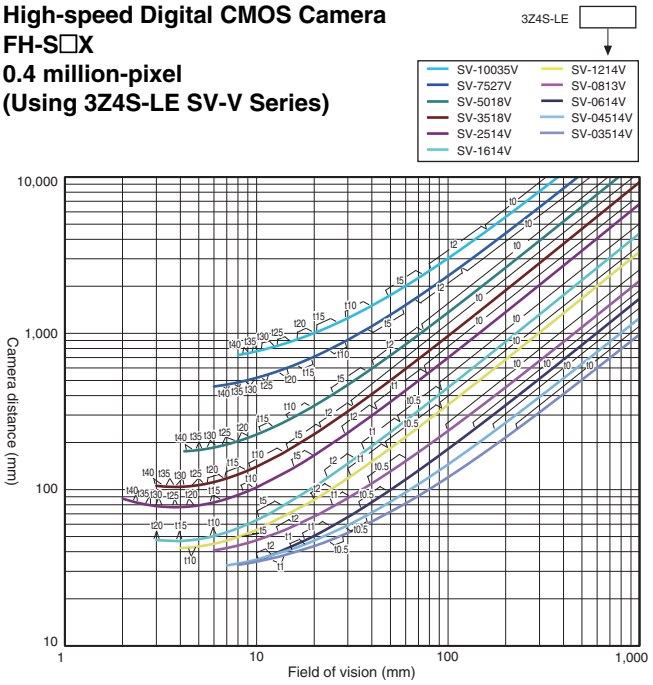

Digital CCD Camera FZ-S□2M 2 million-pixel (Using 3Z4S-LE SV-H Series)

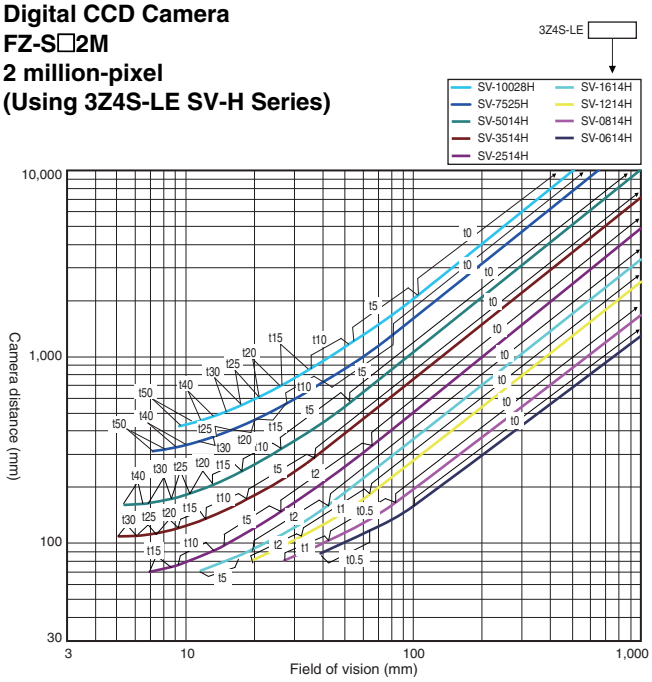

High-speed Digital CMOS Camera FH-S□02 2 million-pixel (Using 3Z4S-LE SV-H/VS-H1 Series)

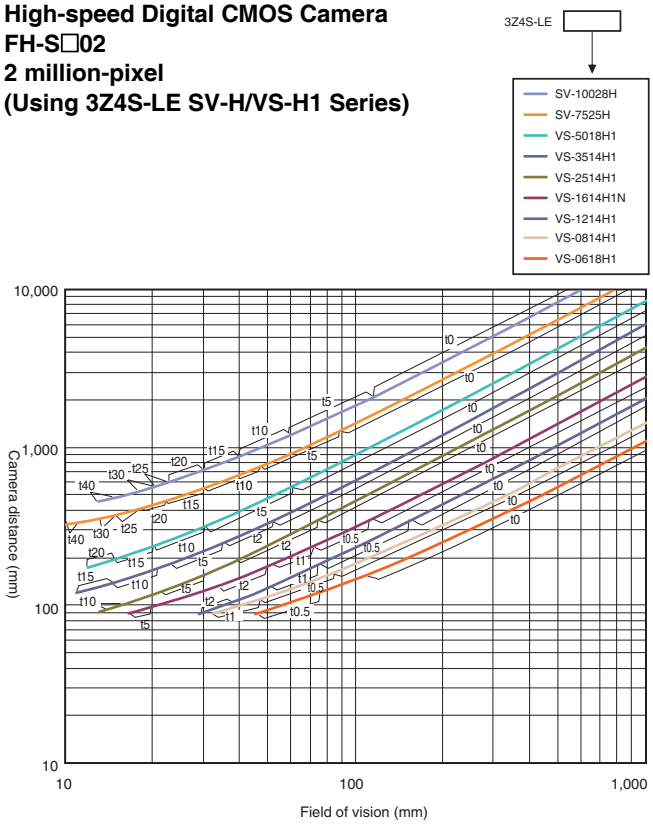

High-speed Digital CMOS Camera FH-S□04 4 million-pixel (Using 3Z4S-LE SV-H/VS-H1 Series)

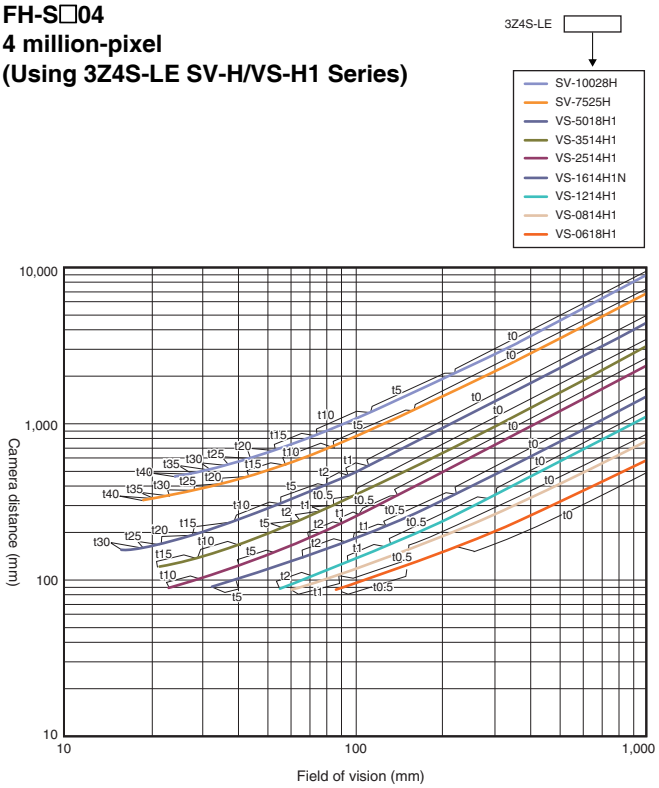

Digital CMOS Camera FH-S□05R 5 million-pixel (Using 3Z4S-LE SV-H Series)

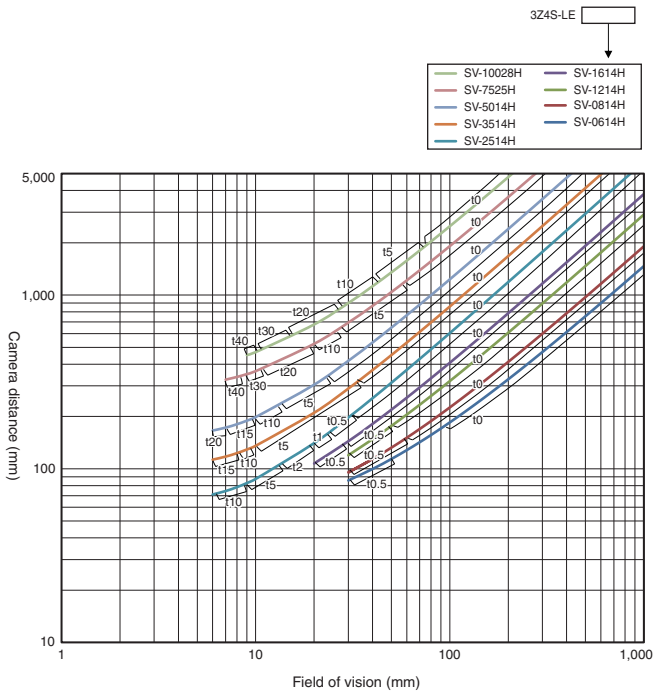

Digital CMOS Camera FZ-S□5M3, High-speed Digital CMOS Camera FH-S□X05 5 million-pixel (Using 3Z4S-LE SV-H Series)

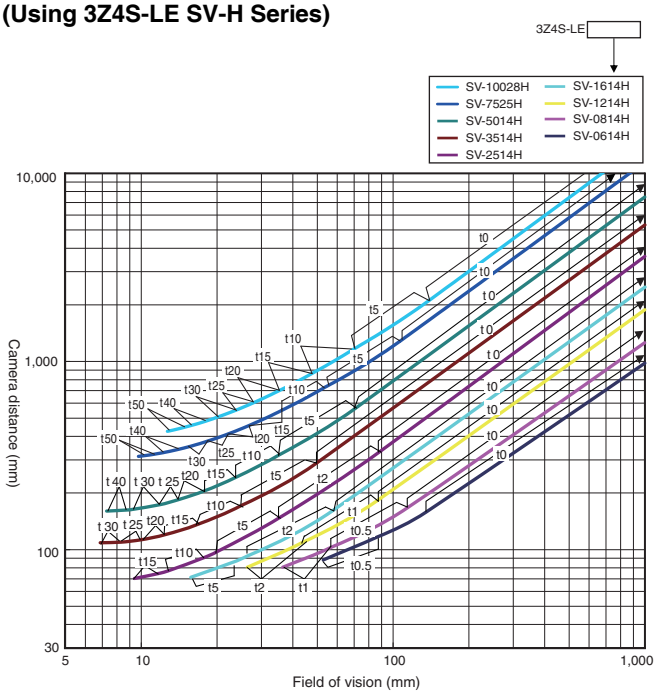

Optical Chart

High-speed Digital CMOS Camera FH-S□X12 12 million-pixel (Using 3Z4S-LE VS-LLD Series)

Note:The 3Z4S-LE VS-LDD Series cannot be used with an extension tube.

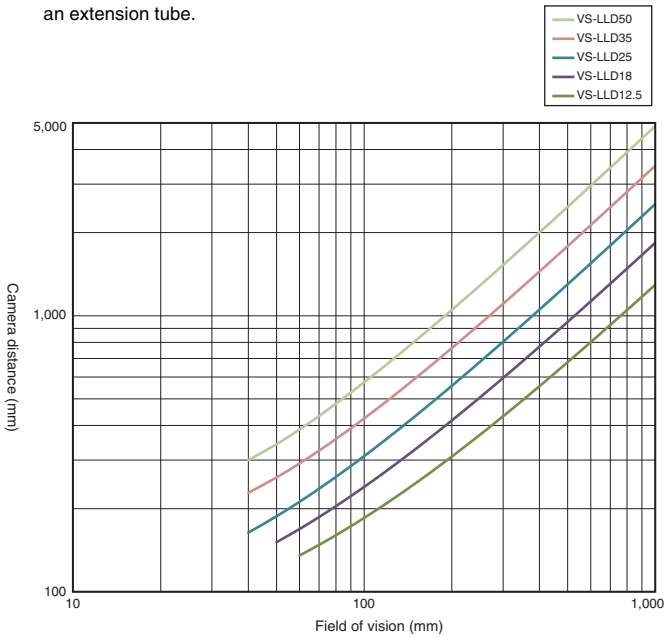

High-speed Digital CMOS Camera FH-S□12 12 million-pixel (Using 3Z4S-LE VS-L/M42-10 Series)

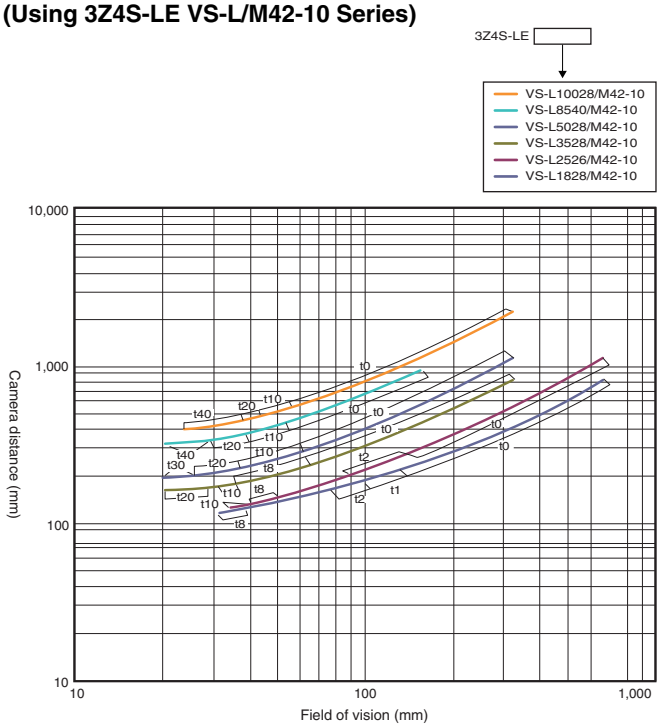

Digital CMOS Camera FH-S□21R 20.4 million-pixel (Using 3Z4S-LE VS-LLD Series)

Note:The 3Z4S-LE VS-LDD Series cannot be used with an extension tube.

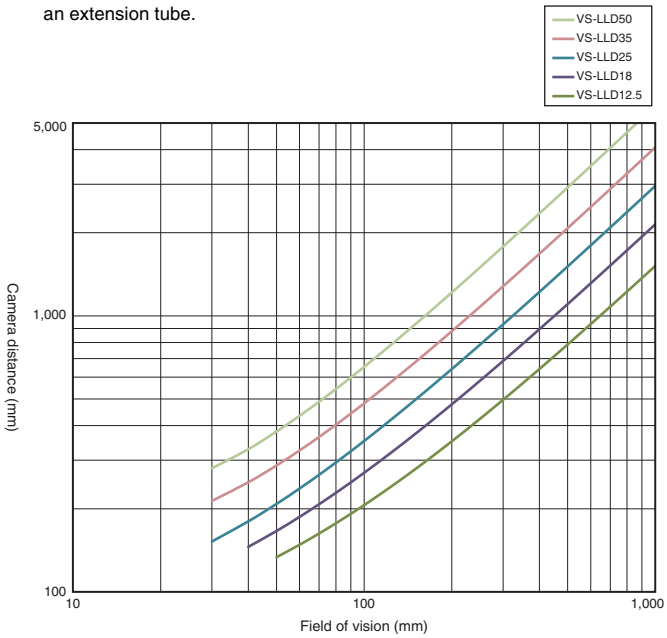

Vibrations and Shocks Resistant Lenses/Telecentric Lenses

High-speed Digital CMOS Camera FH-S□, High-speed Digital CCD Camera FZ-SH□, Digital CCD Camera FZ-S□ 0.3 million-pixel (Using 3Z4S-LE VS-MCA Series)

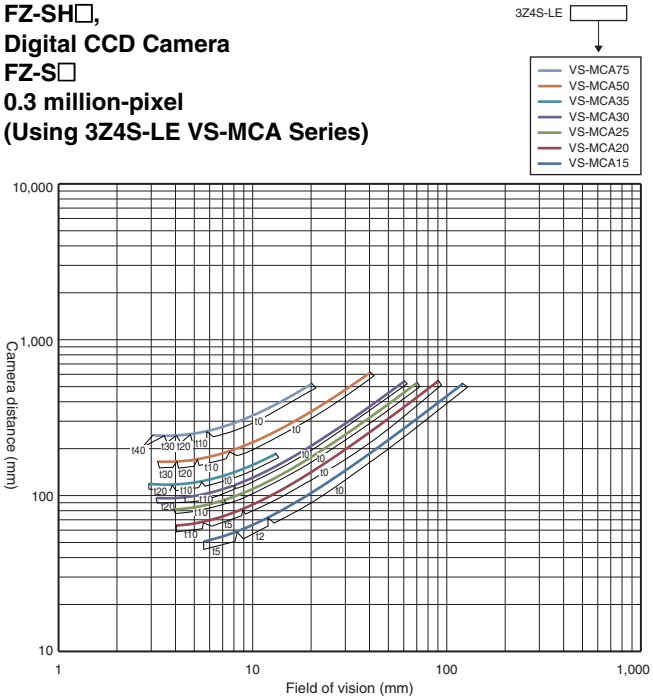

High-speed Digital CMOS Camera FH-S□X 0.4 million-pixel (Using 3Z4S-LE VS-MCA Series)

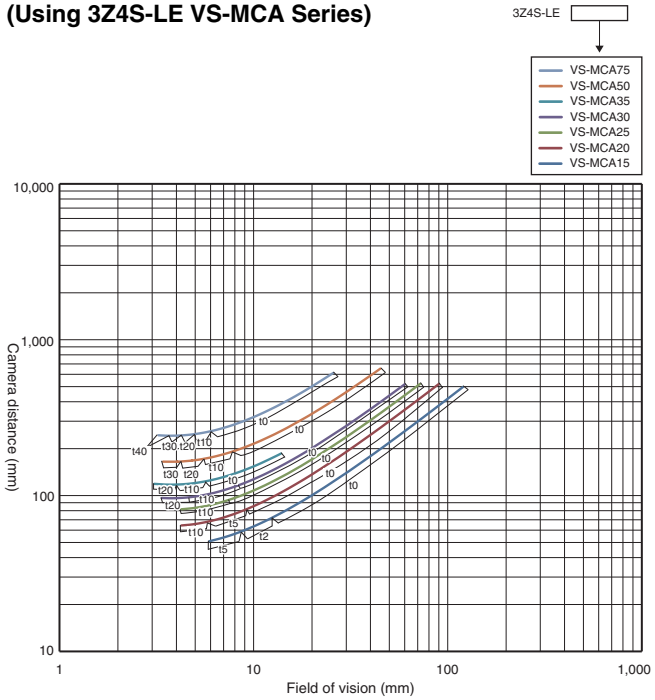

Digital CCD Camera FZ-S□2M 2 million-pixel (Using 3Z4S-LE VS-MCA Series)

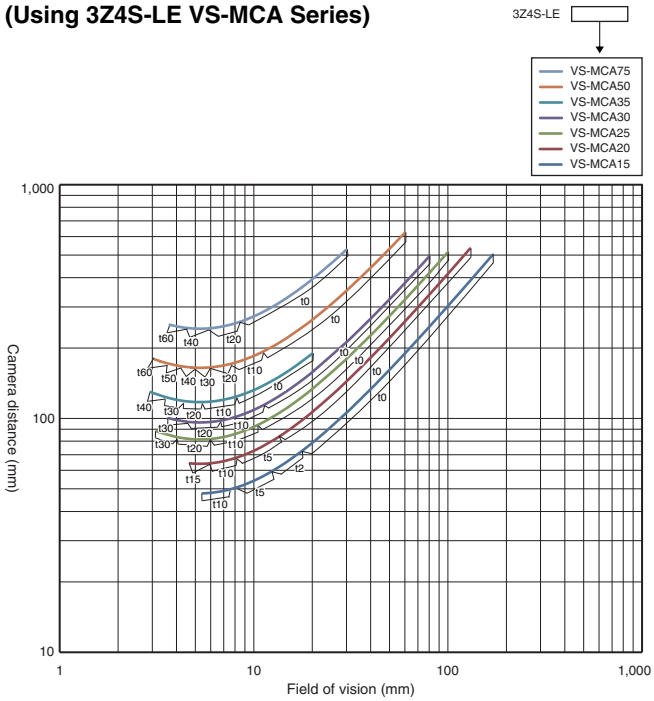

High-speed Digital CMOS Camera FH-S□02 2 million-pixel (Using 3Z4S-LE VS-MCH1 Series)

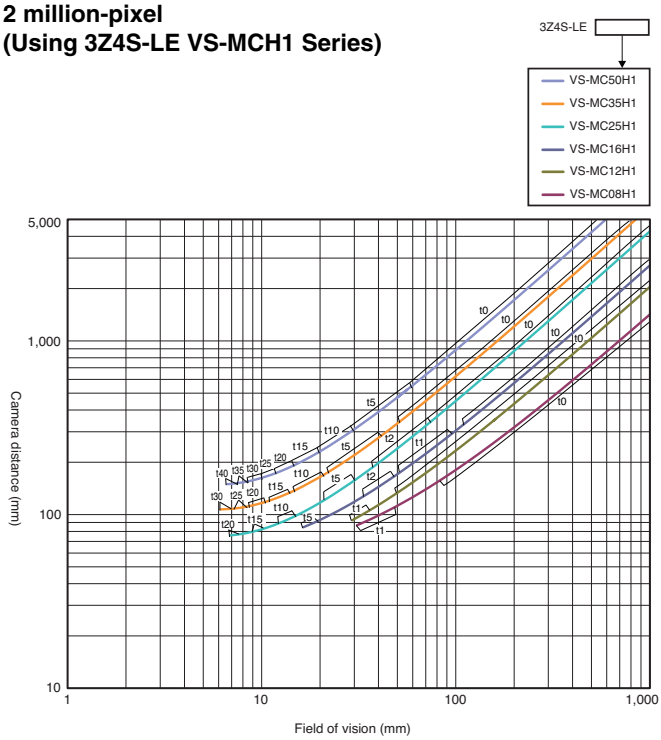

Optical Chart

High-speed Digital CMOS Camera FH-S□02 2 million-pixel (Using 3Z4S-LE VS-MCH Series)

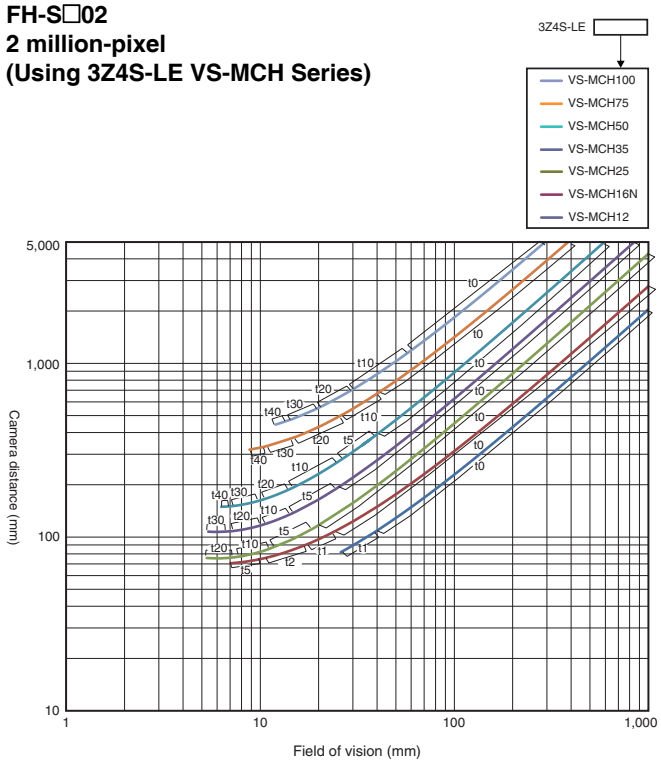

High-speed Digital CMOS Camera FH-S□04 4 million-pixel (Using 3Z4S-LE VS-MCH1 Series)

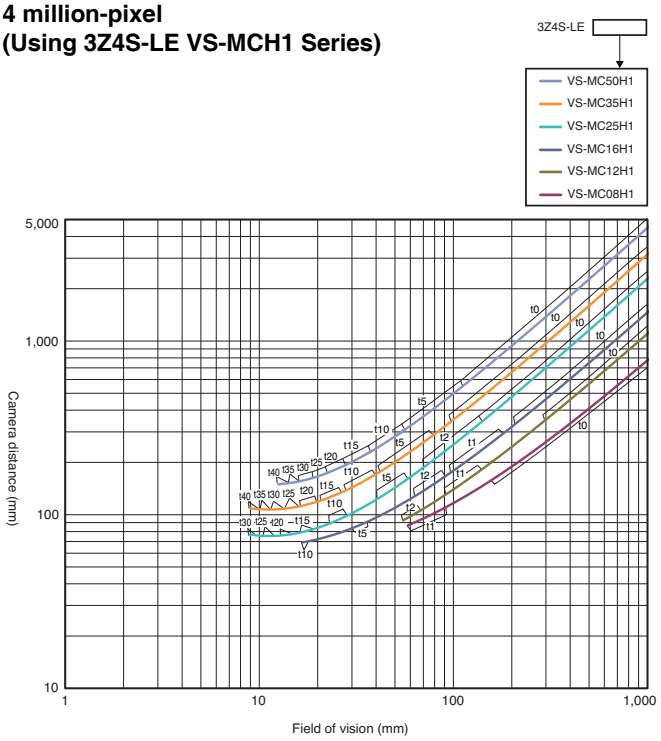

High-speed Digital CMOS Camera FH-S□04 4 million-pixel (Using 3Z4S-LE VS-MCH Series)

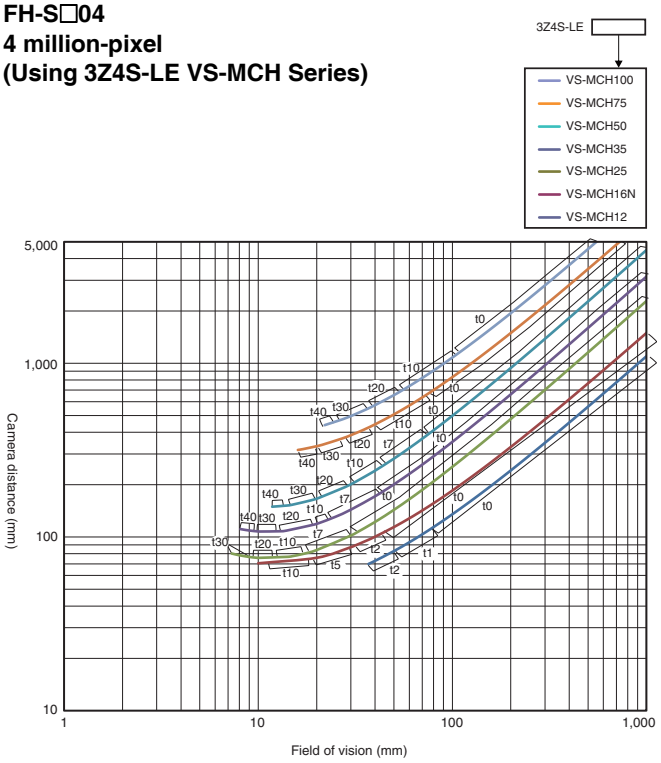

Digital CMOS Camera FH-S□05R 5 million-pixel (Using 3Z4S-LE VS-MCA Series)

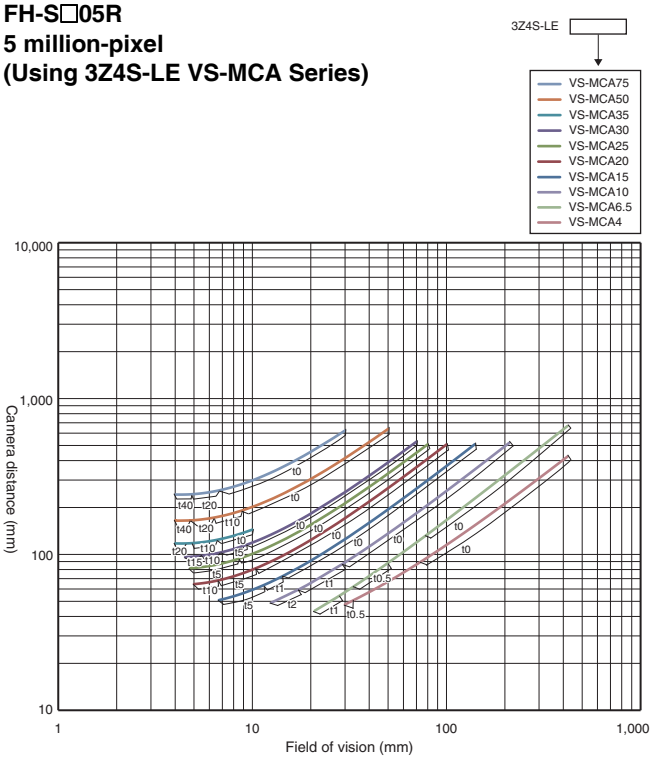

Digital CMOS Camera FZ-S□5M3, High-speed Digital CMOS Camera FH-S□X05 5 million-pixel (Using 3Z4S-LE VS-MCA Series)

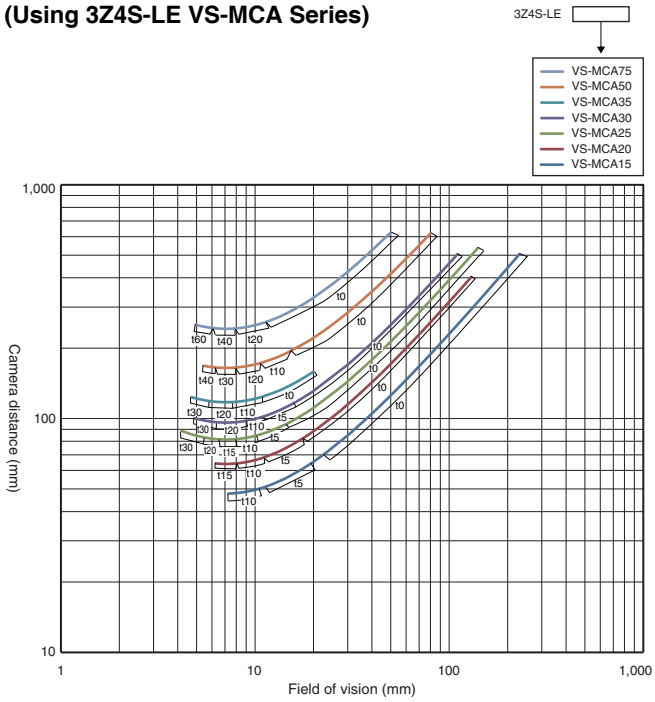

High-speed Digital CMOS Camera FH-S□12 12 million-pixel (Using 3Z4S-LE VS-MCL/M42-10 Series)

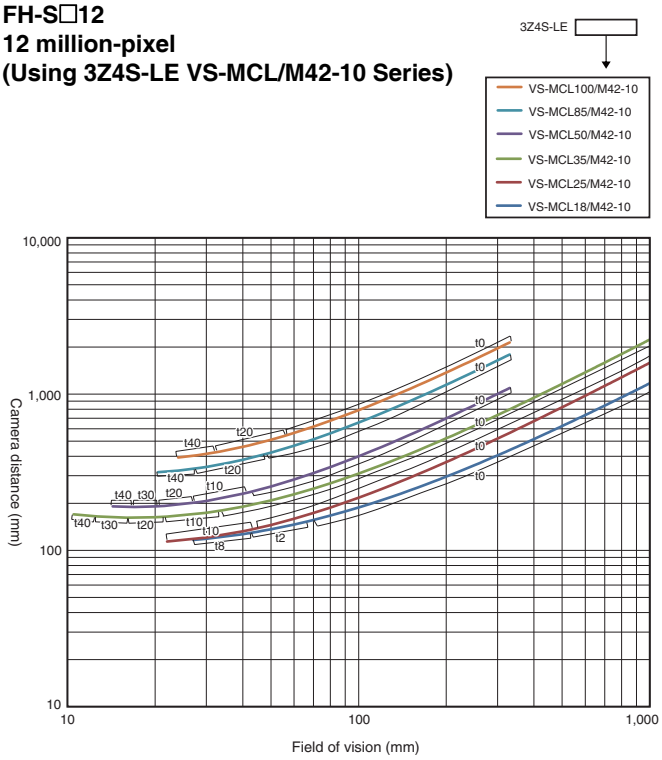

Digital CMOS Camera FH-S□21R 20.4 million-pixel (Using 3Z4S-LE VS-MCH1 Series)

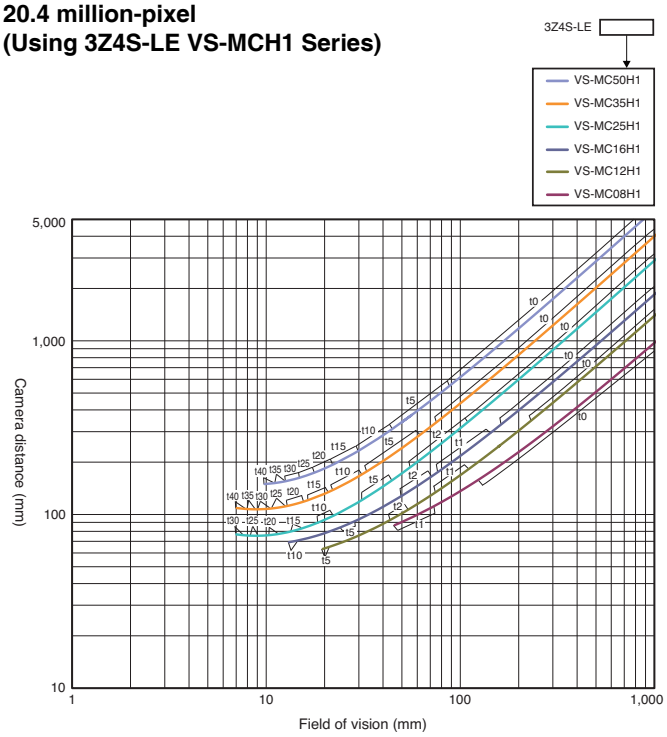

Digital CMOS Camera FH-S□21R 20.4 million-pixel (Using 3Z4S-LE VS-MCH Series)

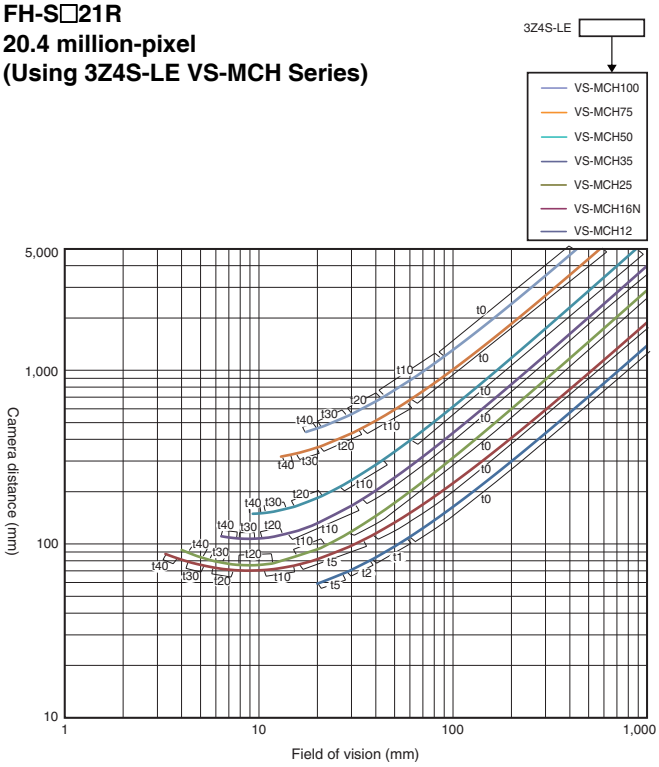

Optical Chart

Smart Camera FHV7 Series

Standard Lenses

0.4 million pixels
1.6 million pixels
Smart Cameras: FHV7H-□004, FHV7H-□016
(for 3Z4S-LE SV-V series)

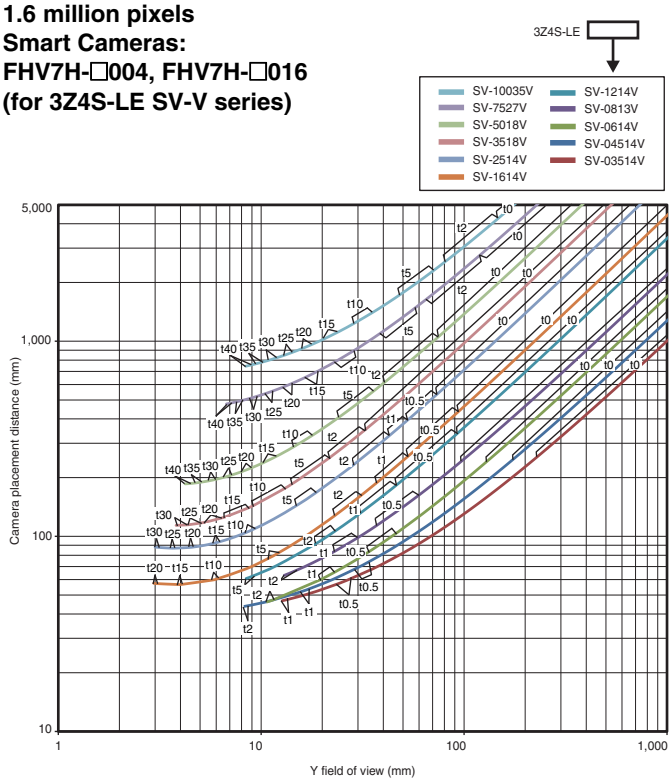

0.4 million pixels
1.6 million pixels
Smart Cameras: FHV7H-□004, FHV7H-□016
(for 3Z4S-LE SV-H series)

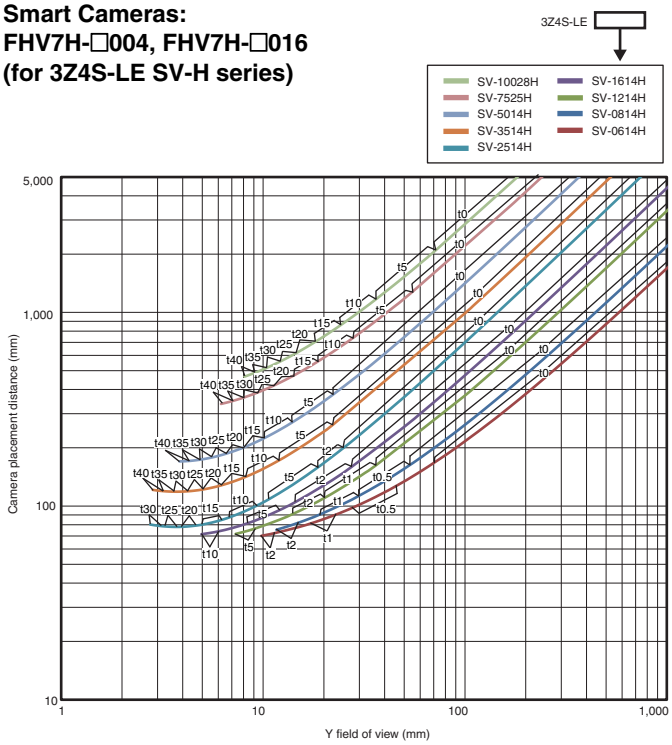

3.2 million pixels
Smart Cameras: FHV7H-□032
(for 3Z4S-LE SV-H series)

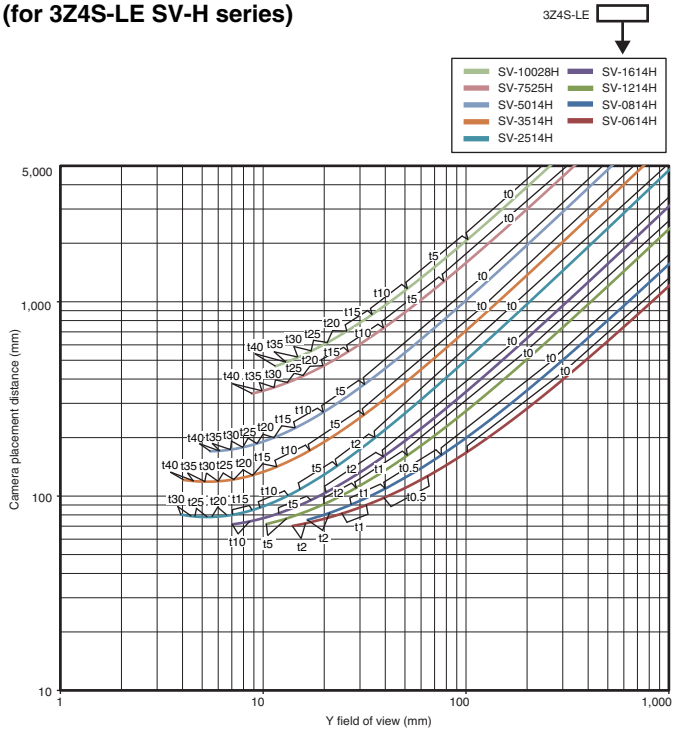

5 million pixels
Smart Cameras: FHV7H-□050
(for 3Z4S-LE SV-H series)

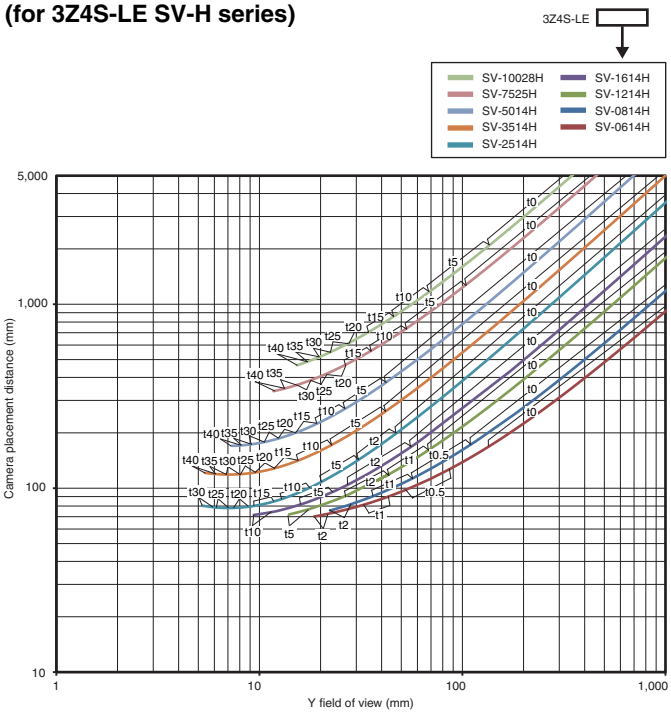

6.3 million pixels
Smart Cameras: FHV7H-□063R
(for 3Z4S-LE SV-H series)

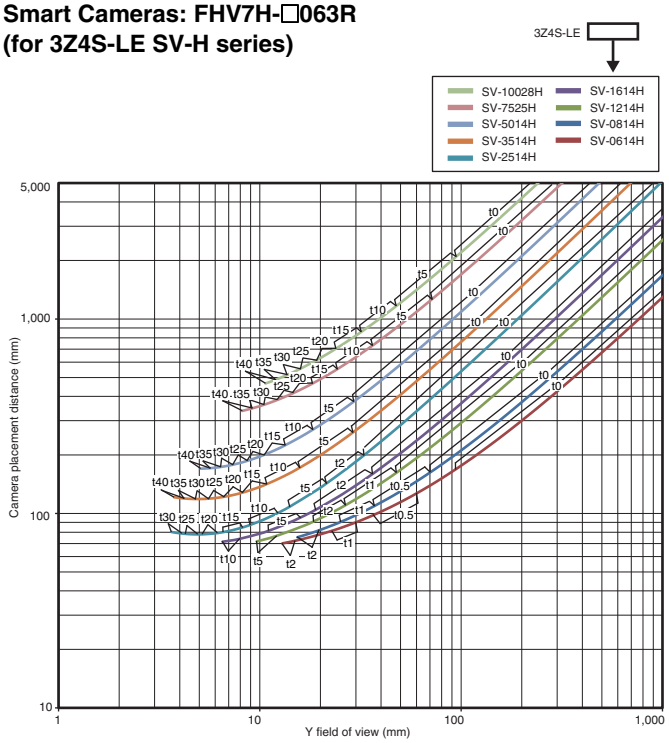

12 million pixels
Smart Cameras: FHV7H-□120R
(for 3Z4S-LE SV-H series)

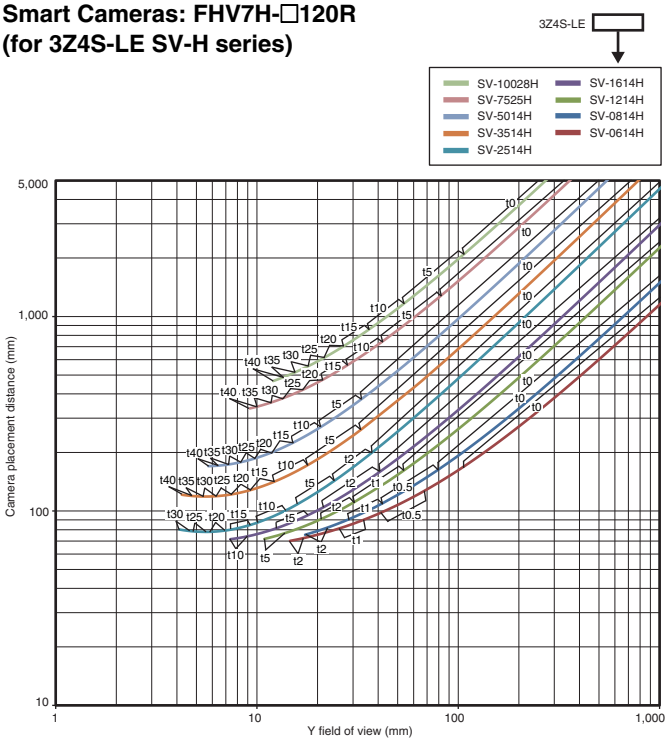

Vibrations and Shocks Resistant Lenses

0.4 million pixels
1.6 million pixels
Smart Cameras: FHV7H-□004, FHV7H-□016
(for 3Z4S-LE VS-MCA series)

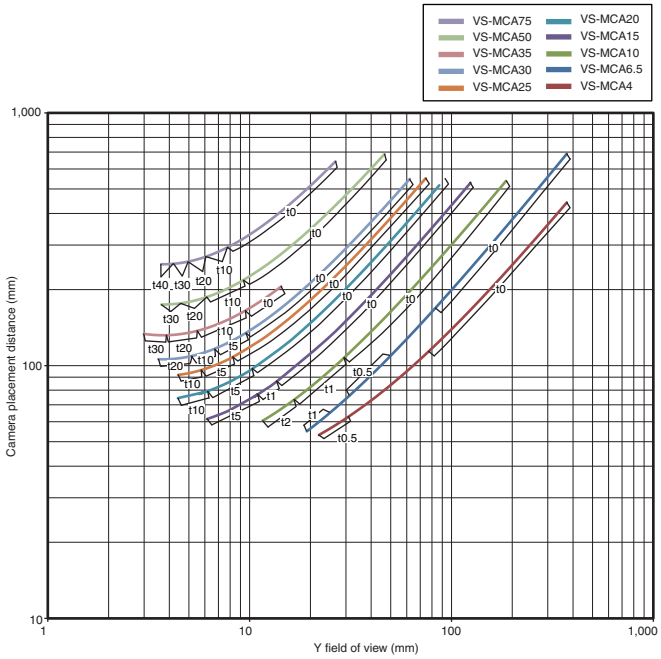

3.2 million pixels
Smart Cameras: FHV7H-□032
(for 3Z4S-LE VS-MCA series)

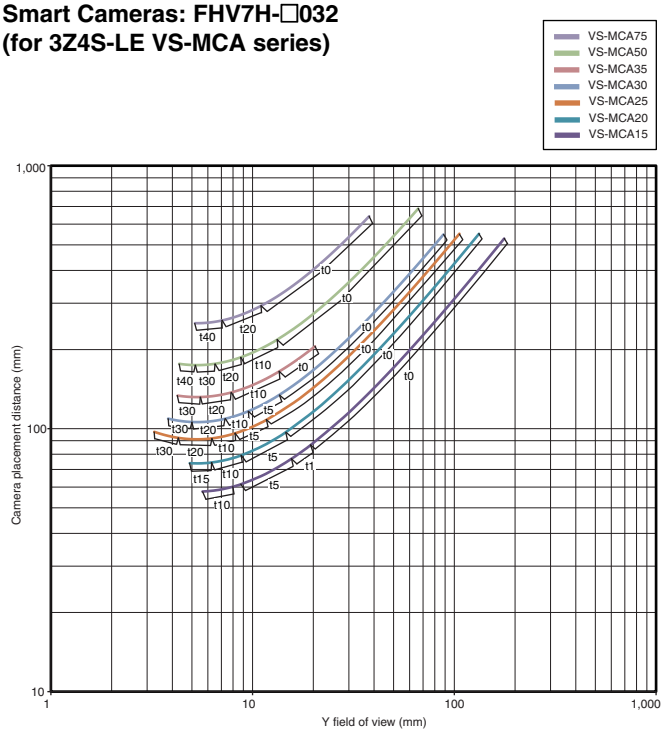

Optical Chart

5 million pixels
Smart Cameras: FHV7H-□050
(for 3Z4S-LE VS-MCA series)

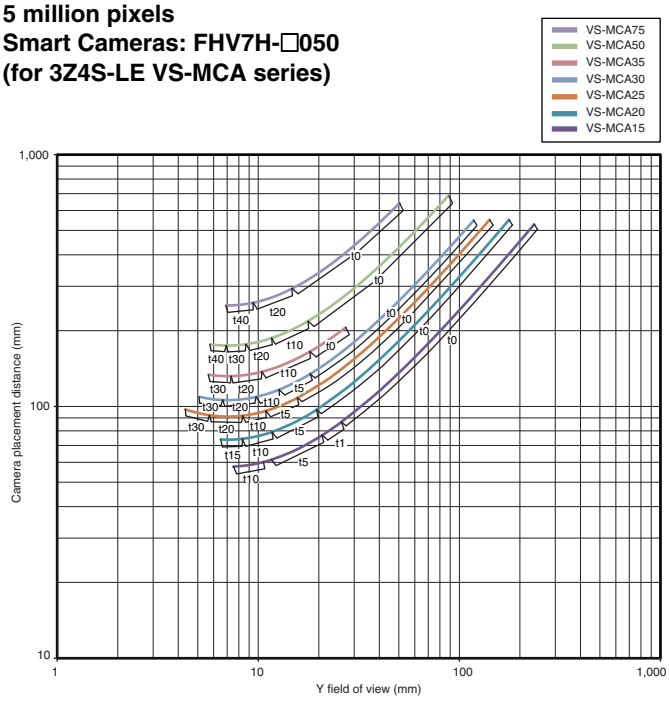

6.3 million pixels
Smart Cameras: FHV7H-□063R
(for 3Z4S-LE VS-MCA series)

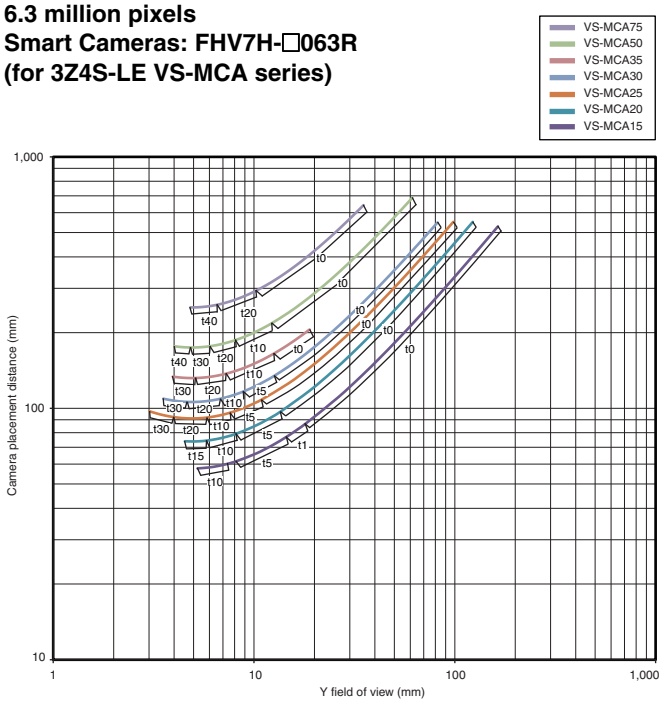

12 million pixels
Smart Cameras: FHV7H-□120R
(for 3Z4S-LE VS-MCA series)

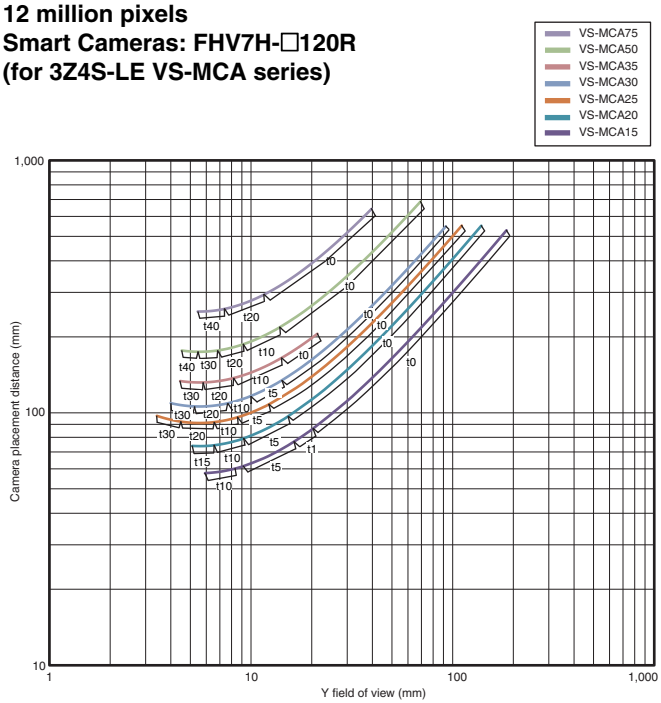

Safety Precautions

Precautions on Safety

●Meaning of Signal Word

In order for the product to be used safely, the following indication is used in this catalog to draw your attention to the cautions. The cautions with the indication describe the important contents for safety.

⚠ WARNING	**Indicates a potentially hazardous situation which, if not avoided, will result in minor or moderate injury, or may result in serious injury or death. Additionally there may be significant property damage.**
⚠ CAUTION	**Indicates a potentially hazardous situation which, if not avoided, may result in minor or moderate injury or property damage.**

●Meaning of Alert Symbol

⃠	**Indicates general prohibitions for which there is no specific symbol.**

●Alert Statements

⚠ WARNING

This product is not designed or rated for ensuring safety of persons. Do not use it for such purposes.	⃠
It may cause permanent damage to vision. Do not look directly at the sun through the lens.	⃠

Precautions for Safe Use

The following points are important to ensure safety, so make sure that they are strictly observed.

1. Installation and Storage Sites

Do not install and store the product in locations subjected to the following conditions:

- Ambient temperature outside the rating
- Rapid temperature fluctuations (causing condensation)
- Presence of corrosive or flammable gases
- Presence of dust, salt, or iron particles
- Direct vibration or shock
- Strong ambient light (such as other laser beams or light from arc-welding machines)
- Direct sunlight or near heaters
- Water, oil, or chemical fumes or spray
- Near high-voltage equipment or power equipment

2. Installation

- Make sure to tighten all installation screws securely

3. Others

- Do not attempt to dismantle, repair, or modify the product.
- Do not drop, impose excessive vibration or shock on the product.
- If you notice an abnormal condition, immediately stop using the product and consult your OMRON representative.
- Be sure to dispose of the product as industrial waste.

Precautions for Correct Use

Observe the following precautions to prevent failure to operate, malfunctions, or undesirable effects on product performance.

1. Maintenance

- Clean the lens with a lens-cleaning cloth or air brush.
- Avoid blowing off foreign matter with your breath. Do not use thinner, benzene, acetone, or kerosene.

2. Using with Product from Other Manufacturer

- Refer to the manual of the product from other manufacturer for installation and replacement.

3. Others

- After removing the lens from the camera, do not leave it in a place exposed to direct sunlight. Failure to do so may cause a fire.

MEMO

Terms and Conditions Agreement

Read and understand this catalog.

Please read and understand this catalog before purchasing the products. Please consult your OMRON representative if you have any questions or comments.

Warranties.

(a) Exclusive Warranty. Omron's exclusive warranty is that the Products will be free from defects in materials and workmanship for a period of twelve months from the date of sale by Omron (or such other period expressed in writing by Omron). Omron disclaims all other warranties, express or implied.

(b) Limitations. OMRON MAKES NO WARRANTY OR REPRESENTATION, EXPRESS OR IMPLIED, ABOUT NON-INFRINGEMENT, MERCHANTABILITY OR FITNESS FOR A PARTICULAR PURPOSE OF THE PRODUCTS. BUYER ACKNOWLEDGES THAT IT ALONE HAS DETERMINED THAT THE PRODUCTS WILL SUITABLY MEET THE REQUIREMENTS OF THEIR INTENDED USE.

Omron further disclaims all warranties and responsibility of any type for claims or expenses based on infringement by the Products or otherwise of any intellectual property right. (c) Buyer Remedy. Omron's sole obligation hereunder shall be, at Omron's election, to (i) replace (in the form originally shipped with Buyer responsible for labor charges for removal or replacement thereof) the non-complying Product, (ii) repair the non-complying Product, or (iii) repay or credit Buyer an amount equal to the purchase price of the non-complying Product; provided that in no event shall Omron be responsible for warranty, repair, indemnity or any other claims or expenses regarding the Products unless Omron's analysis confirms that the Products were properly handled, stored, installed and maintained and not subject to contamination, abuse, misuse or inappropriate modification. Return of any Products by Buyer must be approved in writing by Omron before shipment. Omron Companies shall not be liable for the suitability or unsuitability or the results from the use of Products in combination with any electrical or electronic components, circuits, system assemblies or any other materials or substances or environments. Any advice, recommendations or information given orally or in writing, are not to be construed as an amendment or addition to the above warranty.

See http://www.omron.com/global/ or contact your Omron representative for published information.

Limitation on Liability; Etc.

OMRON COMPANIES SHALL NOT BE LIABLE FOR SPECIAL, INDIRECT, INCIDENTAL, OR CONSEQUENTIAL DAMAGES, LOSS OF PROFITS OR PRODUCTION OR COMMERCIAL LOSS IN ANY WAY CONNECTED WITH THE PRODUCTS, WHETHER SUCH CLAIM IS BASED IN CONTRACT, WARRANTY, NEGLIGENCE OR STRICT LIABILITY.

Further, in no event shall liability of Omron Companies exceed the individual price of the Product on which liability is asserted.

Suitability of Use.

Omron Companies shall not be responsible for conformity with any standards, codes or regulations which apply to the combination of the Product in the Buyer's application or use of the Product. At Buyer's request, Omron will provide applicable third party certification documents identifying ratings and limitations of use which apply to the Product. This information by itself is not sufficient for a complete determination of the suitability of the Product in combination with the end product, machine, system, or other application or use. Buyer shall be solely responsible for determining appropriateness of the particular Product with respect to Buyer's application, product or system. Buyer shall take application responsibility in all cases.

NEVER USE THE PRODUCT FOR AN APPLICATION INVOLVING SERIOUS RISK TO LIFE OR PROPERTY OR IN LARGE QUANTITIES WITHOUT ENSURING THAT THE SYSTEM AS A WHOLE HAS BEEN DESIGNED TO ADDRESS THE RISKS, AND THAT THE OMRON PRODUCT(S) IS PROPERLY RATED AND INSTALLED FOR THE INTENDED USE WITHIN THE OVERALL EQUIPMENT OR SYSTEM.

Programmable Products.

Omron Companies shall not be responsible for the user's programming of a programmable Product, or any consequence thereof.

Performance Data.

Data presented in Omron Company websites, catalogs and other materials is provided as a guide for the user in determining suitability and does not constitute a warranty. It may represent the result of Omron's test conditions, and the user must correlate it to actual application requirements. Actual performance is subject to the Omron's Warranty and Limitations of Liability.

Change in Specifications.

Product specifications and accessories may be changed at any time based on improvements and other reasons. It is our practice to change part numbers when published ratings or features are changed, or when significant construction changes are made. However, some specifications of the Product may be changed without any notice. When in doubt, special part numbers may be assigned to fix or establish key specifications for your application. Please consult with your Omron's representative at any time to confirm actual specifications of purchased Product.

Errors and Omissions.

Information presented by Omron Companies has been checked and is believed to be accurate; however, no responsibility is assumed for clerical, typographical or proofreading errors or omissions.

OMRON Corporation **Industrial Automation Company**
Kyoto, JAPAN
Contact: www.ia.omron.com

Regional Headquarters
OMRON EUROPE B.V.
Sensor Business Unit
Carl-Benz-Str. 4, D-71154 Nufringen, Germany
Tel: (49) 7032-811-0/Fax: (49) 7032-811-199

OMRON ELECTRONICS LLC
2895 Greenspoint Parkway, Suite 200
Hoffman Estates, IL 60169 U.S.A.
Tel: (1) 847-843-7900/Fax: (1) 847-843-7787

OMRON ASIA PACIFIC PTE. LTD.
No. 438A Alexandra Road # 05-05/08 (Lobby 2),
Alexandra Technopark,
Singapore 119967
Tel: (65) 6835-3011/Fax: (65) 6835-2711

OMRON (CHINA) CO., LTD.
Room 2211, Bank of China Tower,
200 Yin Cheng Zhong Road,
PuDong New Area, Shanghai, 200120, China
Tel: (86) 21-5037-2222/Fax: (86) 21-5037-2200

Authorized Distributor:

CSM_12_4
Cat. No. Q198-E1-12 0421 (1213)